ResearchGate

See discussions, stats, and author profiles for this publication at: https://www.researchgate.net/publication/224168304

Parameter Variation Tolerance and Error Resiliency: New Design Paradigm for the Nanoscale Era

Article *in* Proceedings of the IEEE · November 2010

DOI: 10.1109/JPROC.2010.2057230 · Source: IEEE Xplore

CITATIONS
134

READS
647

2 authors:

Swaroop Ghosh
Pennsylvania State University
140 PUBLICATIONS **1,083** CITATIONS

SEE PROFILE

Kaushik Roy
Purdue University
1,138 PUBLICATIONS **28,760** CITATIONS

SEE PROFILE

Some of the authors of this publication are also working on these related projects:

Project Conference paper View project

Project Neuromorphic Computing View project

All content following this page was uploaded by Swaroop Ghosh on 12 April 2016.

The user has requested enhancement of the downloaded file.

CONTRIBUTED PAPER

Parameter Variation Tolerance and Error Resiliency: New Design Paradigm for the Nanoscale Era

The authors present an overview of various sources of process variations and reliability degradation mechanisms and related information to maintain performance envelope and yield as silicon devices enter the deeper regions of nanometer scaling.

By Swaroop Ghosh and Kaushik Roy, *Fellow IEEE*

ABSTRACT | Variations in process parameters affect the operation of integrated circuits (ICs) and pose a significant threat to the continued scaling of transistor dimensions. Such parameter variations, however, tend to affect logic and memory circuits in different ways. In logic, this fluctuation in device geometries might prevent them from meeting timing and power constraints and degrade the parametric yield. Memories, on the other hand, experience stability failures on account of such variations. Process limitations are not exhibited as physical disparities only; transistors experience temporal device degradation as well. Such issues are expected to further worsen with technology scaling. Resolving the problems of traditional Si-based technologies by employing non-Si alternatives may not present a viable solution; the non-Si miniature devices are expected to suffer the ill-effects of process/temporal variations as well. To circumvent these nonidealities, there is a need to design ICs that can adapt themselves to operate correctly under the presence of such inconsistencies. In this paper, we first provide an overview of the process variations and time-dependent degradation mechanisms. Next, we discuss the emerging paradigm of variation-tolerant adaptive design for both logic and memories. Interestingly, these resiliency techniques transcend several design abstraction levels—we present circuit and microarchitectural techniques to perform reliable computations in an unreliable environment.

KEYWORDS | Digital signal processing; graceful quality degradation; low power; process-tolerant design; process variations; reliability; robust design; voltage scaling

I. INTRODUCTION

Successful design of digital integrated circuits (ICs) has often relied on complicated optimization among various design specifications such as silicon area, speed, testability, design effort, and power dissipation. Such a traditional design approach inherently assumes that the electrical and physical properties of transistors are deterministic and hence, predictable over the device lifetime. However, with the silicon technology entering the sub-65-nm regime, transistors no longer act deterministically. Fluctuation in device dimensions due to manufacturing process (subwavelength lithography, chemical mechanical polishing, etc.) is a serious issue in nanometer technologies. Until approximately 0.35-μm technology node, process variation was inconsequential for the IC industry. Circuits were mostly immune to minute variations because the variations were negligible compared to the nominal

Manuscript received February 8, 2009; revised December 28, 2009; accepted May 24, 2010. Date of publication August 19, 2010; date of current version September 22, 2010.
S. Ghosh was with the School of Electrical and Computer Engineering, Purdue University, West Lafayette, IN 47906 USA. He is now with Memory Circuit Technology Group, Intel, Hillsboro, OR 97007 USA (e-mail: ghosh3@ecn.purdue.edu).
K. Roy is with the School of Electrical and Computer Engineering, Purdue University, West Lafayette, IN 47906 USA (e-mail: kaushik@ecn.purdue.edu).

Digital Object Identifier: 10.1109/JPROC.2010.2057230

 0018-9219/$26.00 ©2010 IEEE

device sizes. However, with the growing disparity between feature size and optical wavelengths of lithographic processes at scaled dimensions (below 90 nm), the issue of parameter variation is becoming severe. In the following sections, first we describe the parametric variations and its ill-effect on power dissipation. Then, we provide an overview of various emerging circuit and microarchitectural solutions to resolve these issues.

A. Parametric Variations

Variations can have two main components: interdie and intradie. Parametric variations between dies that come from different runs, lots, and wafers are categorized into *interdie variations* whereas variation of transistor strengths within the same die are defined as *intradie variations*. Fluctuations in length (L), width (W), oxide thickness (T_{OX}), flat-band conditions, etc., give rise to interdie process variations [166] whereas line edge roughness (LER) or random dopant fluctuations (RDFs) cause intradie random variations in process parameters [1]–[7]. Systems that are designed without consideration to process variations fail to meet the desired timing, power, stability, and quality specifications. For example, a chip designed to run at 2 GHz of speed may run only at 1 GHz (due to increased threshold voltage or degraded on-current of the devices) making it unworthy to be useful. However, one can certainly follow an overly pessimistic design methodology (using large guard bands) that can sustain the impact of variations in all process corners. Such designs are usually time and area inefficient to be beneficial. There can be two ways to address the issue of process variation—by controlling the existing process technology (which result in less variation) or by designing circuits and architectures that are immune to variations. In this paper, the emphasis has been given to the second choice because controlling the process is expensive and in some cases may not be viable without changing the devices itself (it should be noted that some of the emerging devices may also suffer from increased variations as well [8]–[13]). Therefore, process variation awareness has become an inseparable part of modern system design.

B. Temporal Variations

Another important issue due to scaling of physical and electrical parameters is temporal variations. These types of variations can be categorized into two parts—environmental and aging-related. Temperature and voltage fluctuations fall under the category of *environmental* variations whereas negative bias temperature instability (NBTI) [15]–[18], [21]–[24], [28]–[38], positive bias temperature instability (PBTI) [19], [20], hot carrier injection (HCI) [39]–[41], time-dependent dielectric breakdown (TDDB) [42]–[44], and electromigration [45] give rise to so-called *aging* variation. Environmental variation like voltage fluctuation is the outcome of circuit switchings and lack of strong power grid. Similarly, temperature fluctuation is the result of excessive power consumption by a circuit that generates heat whereas the package lacks capability to dissipate it. Such variations degrade the robustness of the circuit by increasing speed margins, inducing glitches, creating nonuniform circuit delays and thermal runaways. The age-related variations degrade device strength when a device is used for a long period of time. For example, an IC tested and shipped for 2 GHz of speed may fail to run at the rated speed after one or two years. Along with device-related variations, the interconnect parameter variations [76] also adds to the adversity of the situation.

C. Power and Process Variations

Apart from process variations, modern circuits also suffer from escalating power consumption [14]. Not only dynamic power but also leakage power has emerged as a dominant component of overall power consumption in scaled technologies. Power management techniques, e.g., supply voltage scaling, power gating, multiple V_{DD} and V_{TH} designs further magnify the problems associated with process-induced variations. For example, consider the supply voltage scaling. As the voltage is scaled down, the path delay increases worsening the effect of variations. This is elucidated in Fig. 1. It clearly shows that lower V_{DD} not only increases the mean but also the standard deviation (STD) of the overall path delay distribution. Therefore, the number of paths failing to meet the target speed also increases thereby degrading the timing yield. On the other hand, scaling the supply voltage up reduces variation at the cost of power consumption. Power and process variation resilience are therefore conflicting design requirements and one comes at the cost of the other. Meeting a desired power specification with certain degree of process tolerance is becoming an extremely challenging task.

D. Solutions at Various Levels of Abstractions

1) Circuit Level: In order to address the aforementioned issues, statistical design approach has been investigated as

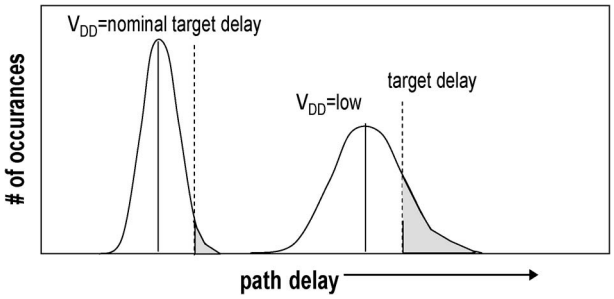

Fig. 1. ***Impact of supply voltage scaling on path delay distribution. Both mean and sigma of delay distribution as well as the number of paths failing to meet target frequency increase.***

an effective method to ensure certain yield criteria. In this approach, the design space is explored to optimize design parameters (e.g., power, reliability) to meet timing yield and target frequency. Transistor size and V_{TH} (transistor threshold voltage) are often used as knobs to tune the power and performance. Larger transistor size or lower V_{TH} improves the performance at the cost of power. Several gate-level sizing and/or V_{TH} assignment techniques [46]–[57] have been proposed recently addressing the minimization of total power while maintaining the timing yield. Timing optimization to meet certain performance/area/power usually results in circuits with many equally long (critical) paths creating "a wall" in the path delay distribution. Therefore, a number of paths get exposed to process fluctuation-induced delay variation. An uncertainty-aware design technique proposed in [58] describes an optimization process to reduce the wall of equally long paths.

On the other end of the spectrum, design techniques have been proposed for postsilicon process compensation and process adaptation to deal with process-related timing failures. Transistor V_{TH} is a function of body potential and it can be tuned to tradeoff power with performance. FBB reduces the V_{TH} and improves performance while reverse body bias increases the V_{TH} and reduces leakage power. Adaptive body biasing (ABB) [59] is one such technique, which tries to reduce the frequency and leakage spread by carefully selecting the body bias. The leakier dies are reverse biased whereas the slower dies are forward biased, thereby improving the overall timing yield. Several other research works try to optimize power and yield by mixing gate sizing, multi-V_{TH} with post-Si tuning (e.g., body bias) [26], [27], [60]–[63].

2) Microarchitectural Level: Due to the quadratic dependence of dynamic power of a circuit on its operating voltage, supply voltage scaling has been extremely effective in reducing the power dissipation. Researchers have investigated logic design approaches that are robust with respect to process variations and, at the same time, suitable for aggressive voltage scaling. One such technique, called RAZOR [64]–[68], uses dynamic detection and correction of circuit timing errors by using a shadow latch. If the shadow latch detects a timing failure, then the supply voltage is boosted up and the instruction is replayed for correct computation. This is continued until the error rate is below certain acceptable number. Therefore, the margins due to PVT variations can be eliminated.

Adaptive (or variable) latency techniques for structures such as caches [69] and combined register files and execution units [70], [150], [151] can address device variability by tuning architectural latencies. The fast paths are exercised at rated frequency whereas slower paths due to process variability are operated with extended latency (i.e., multiple clock cycles). Therefore, process fluctuation-induced delay can be tolerated with small throughput penalty. In pipelined designs, variation-induced delay failures can originate from any stage corrupting the entire pipeline. Tiwari *et al.* [71] presented pipelined logic loops for the entire processor using selectable "donor stages" that provide additional timing margins for certain loops. Therefore, extra delay in computation due to process variation in one stage can be mitigated by providing some extra time from another stage.

It can be noted that pipelined design can experience timing slack either due to frequency or due to supply voltage under process variation. Therefore, both voltage and latency can be selectively chosen for each of the pipelined stages for achieving optimal power and performance under variability. In [72] and [73], the authors describe ReVIVaL, which is a postfabrication voltage interpolation technique that provides an "effective voltage" to individual blocks within individual processor cores. By coupling variable latency with voltage interpolation, ReVIVaL provides significant benefits in terms of process resilience and power over implementing variable-latency alone.

Contrary to RAZOR, Ghosh *et al.* [74] propose a design time technique called CRISTA to allow voltage overscaling (i.e., supply voltage below specified value) while meeting the desired frequency and yield. CRISTA isolates the critical (long) paths of the design, and provides an extra clock cycle for those paths. The CRISTA design methodology ensures the activation of long paths to be rare, thereby reducing performance impact. This allows lowering the supply voltage below specified value and exposes the timing slack of off-critical (short) paths.

Algorithmic noise tolerance (ANT) [75] is another energy-efficient adaptive solution for low power broadband communication systems. The key idea behind ANT is to permit errors to occur in a signal processing block and then correct it via a separate error control (EC) block. This allows the main DSP to operate at overscaled voltage.

Several techniques have been suggested to circumvent similar issues in memories as well and those will be covered in Section IV. The important point to note is that proper measures at all levels of hierarchy (from circuits to architecture) are essential to mitigate the problems associated with parameter variations and to design robust systems.

This paper presents an overview of the process and reliability-induced variations and reviews several state-of-the-art circuit and microarchitectural techniques to deal with these issues. In particular, we provide the following:

- classification of process variation and reliability degradations in nanoscaled technologies;
- impact of process variation and reliability degradations on logic and memory;
- variation-tolerant logic and memory design.

The rest of the paper is organized as follows. The classification of process variation and reliability degradations

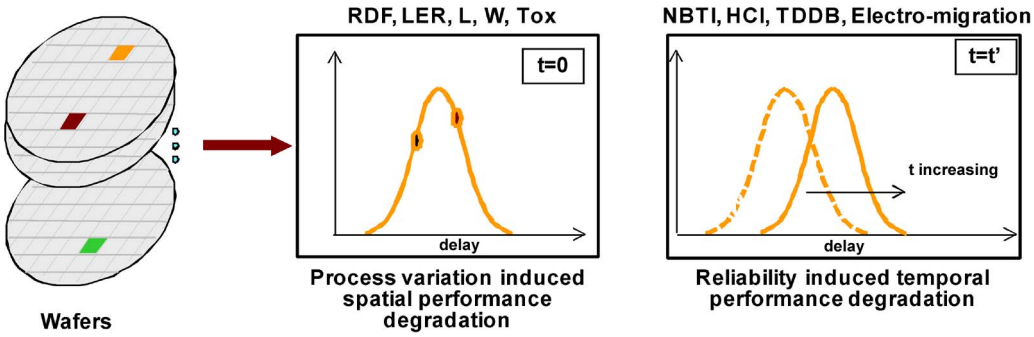

Fig. 2. *Spatial and temporal process variations. The pdf of chip delay due to temporal degradation has been shown.*

is discussed in Section II. The impact of process variation and reliability degradations on logic and memory is introduced in Section III. The process variation-tolerant design techniques are presented in Section IV and resilience to temporal degradation is discussed in Section V. The impact of variations in emerging devices and technologies is presented in Section VI, and finally, the conclusions are drawn in Section VII.

II. PROCESS VARIATIONS: CLASSIFICATION AND SCALING TREND WITH TECHNOLOGY

Parameter variations can be categorized into two broad areas: 1) spatial and 2) temporal. The variation in device characteristics at $t = 0$ s is due to spatial process variation. Such variation can be subdivided into interdie and intradie process variations. This is further clarified in Fig. 2 with an example of chips that are designed for a particular speed. Variations in device strengths between chips belonging to different runs, lots, and wafers result in dies that vary in speed. The figure shows that the speed follows a distribution where each point belongs to chips running at a particular speed. This behavior corresponds to $t = 0$ s. Devices also change their characteristics over time due to temporal fluctuation of voltage and temperature as well as due to aging: NBTI, PBTI, TDDB, and HCI under the category of aging. For example, the p-metal–oxide–semiconductor (PMOS) transistor becomes slower due to NBTI-induced V_{TH} degradation and wire delay may increase due to electromigration of metal. Therefore, the dies become slow and the entire distribution shifts in temporal fashion (Fig. 2). The variation in device characteristics over time (i.e., at $t = t'$) is termed temporal variations. In the following paragraphs, we provide more details of these two sources of variations.

A. Spatial Variations

The spatial process variations can be attributed to several sources, namely, subwavelength lithography, RDF, LER, and so on. Optical lithography has been effectively used for fabrication over several decades. Fig. 3 shows the trend of feature size and advancement of optical lithography. For the present technology regime (< 65 nm), the feature sizes of the devices are smaller than the wavelength of light, and therefore, printing the actual layout correctly is extremely difficult. This is further worsened by the processes that are carried out during fabrication. Some of the processes and corresponding sources of variations are listed as follows [76]:

- wafer: topography, reflectivity;
- reticle: CD error, proximity effects, defects;
- stepper: lens heating, focus, dose, lens aberrations;
- etch: power, pressure, flow rate;
- resist: thickness, refractive index;
- develop: time, temperature, rinse;
- environment: humidity, pressure.

The above manufacturing processes result in fluctuations in L, W, T_{OX}, V_{TH} (interdie variations) as well as

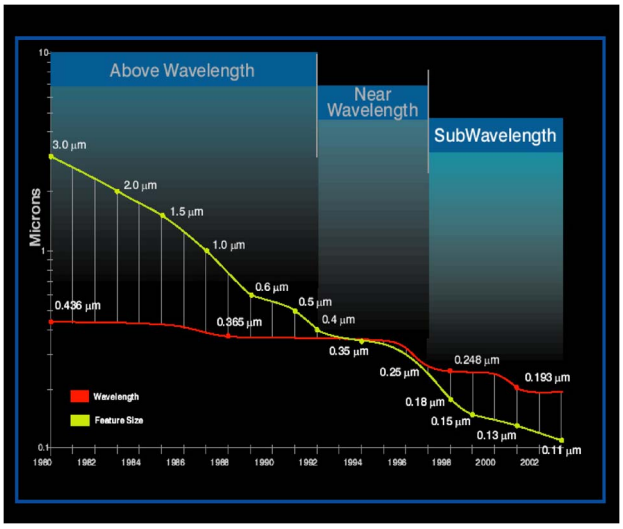

Fig. 3. *Scaling trend of device feature size and optical wavelength of lithography process (Courtesy: Synopsys Inc.).*

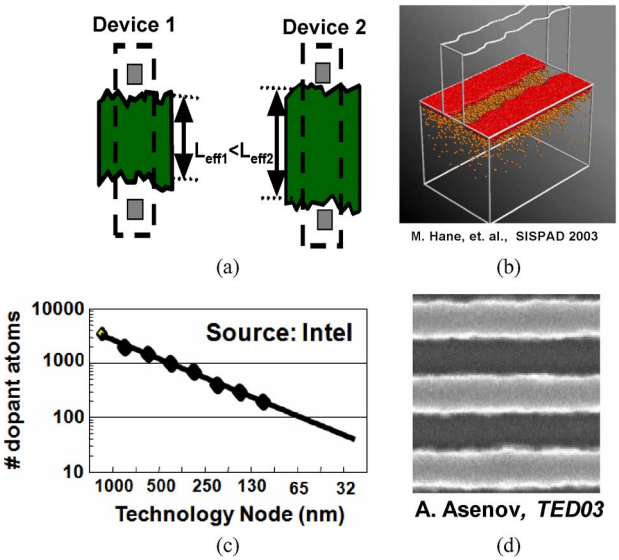

Fig. 4. *Spatial variations: (a) channel length variation, (b) RDF [2], (c) scaling trend of number of doping atoms in the channel, (d) LER [1].*

dopant atom concentration and line edge irregularities (intradie variations) [Fig. 4(a)]. In older technology generations (such as 0.35, 0.25, or 0.18 μm), the number of dopant atoms in the channel was in the order of 1000. Therefore, a small variation in the number and location of the dopant atom was not catastrophic. However, in scaled complementary metal–oxide–semiconductor (CMOS) devices (e.g., 65, 45 nm) the number of dopant atoms is small [$\sim$50–100 as shown in Fig. 4(b) and (c)]. Therefore, the impact of variation in dopant atoms in the channel has become significant. There exists statistical fluctuation in the number/location of dopants in the channel that translates into a threshold voltage variation [41]. Another source of intradie variation is LER [Fig. 4(d)] that is the outcome of imperfect etching process [76]. LER is defined as the variation in poly width that forms the transistor. The fluctuation in poly results in transistor of shorter or longer channel length. The irregular edge of the channel changes the transistor strength and causes mismatch between two similar transistors within a chip. The interdie and intradie variations of aforementioned parameters change the nature of delay as well as leakage from deterministic to stochastic.

It has been shown [77], [78] that introduction of high-k metal gates may reduce the effect of intradie variations. This is mainly due to the fact that high-k metal gates reduce gate leakage. Therefore, gate oxide can be scaled down further without affecting the gate leakage. Due to reduction in gate oxide, the random variation coefficient may get reduced. However, the technology comes with its own challenges, e.g., strain, process integration, reduced reliability, reduced mobility, dual band-edge workfunction, and thermal stability.

One factor that is not covered in the above discussion is the interconnect variations which is also important with scaling geometries. The width, spacing, thickness of the metal, dielectric thickness, etc., can fluctuate [79] changing the interconnect behavior.

B. Temporal Variations

So far we have discussed the impact of process variability on the device characteristics. Due to scaled dimensions, the operating conditions of the ICs also change circuit behavior. Voltage and temperature fluctuation manifests as unpredictable circuit speed whereas persistent stress on the devices leads to systematic performance and reliability degradation. The devices degrade over a lifetime and may not retain their original specifications. One general degradation type is defect generation in the oxide bulk or at the Si–SiO_2 interface over time. The defects can increase leakage current through the gate dielectric, change transistor metrics such as the threshold voltage, or result in the device failure due to oxide breakdown. In the following paragraphs, we will describe several mechanisms responsible for temporal variations.

NBTI [15]–[18] is one of the most important threats to PMOS transistors in very large scale integration (VLSI) circuits. The electrical stress ($V_{GS} < 0$) on the transistor generates traps at the Si–SiO_2 interface [Fig. 5(a)]. These defect sites increase the threshold voltage, reduce channel mobility of the metal–oxide–semiconductor field-effect transistors (MOSFETs), or induce parasitic capacitances and degrade the performance. Overall, significant reduction in the performance metrics implies a shorter lifetime and poses a challenge for the IC manufacturers. One special property of NBTI is the recovery mechanism, i.e., the interface traps can be passivated partially when the stress is reduced. This is shown in Fig. 5(a). The PMOS experiences NBTI stress when $\mathrm{In} = 0$ and recovers when $\mathrm{In} = 1$. The geometry of the MOSFETs shapes the way hydrogen diffuses and thus determines the NBTI-induced interface trap generation rate. Numerical simulations and theoretical analysis have shown that for narrow-width planar, triple-gate and surround-gate MOSFETs, the NBTI degradation rate increases significantly as the devices are scaled down [33]. This indicates that the expected performance enhancement of such future generation devices could be tempered by reliability considerations.

PBTI [19], [20] is experienced by the n-type metal–oxide–semiconductor (NMOS) transistors similar to the NBTI in case of PMOS transistors. Until recently, NBTI effect for PMOS was considered to be more severe than PBTI. However, due to introduction of high-k dielectric and metal gates in sub-45-nm technologies, PBTI is becoming an equally important reliability concern [19].

HCI [39], [40] can create defects at the Si–SiO_2 interface near the drain edge as well as in the oxide bulk [39]. Similar to NBTI, the traps shift the device metrics and reduce performance. The damage is due to carrier heating

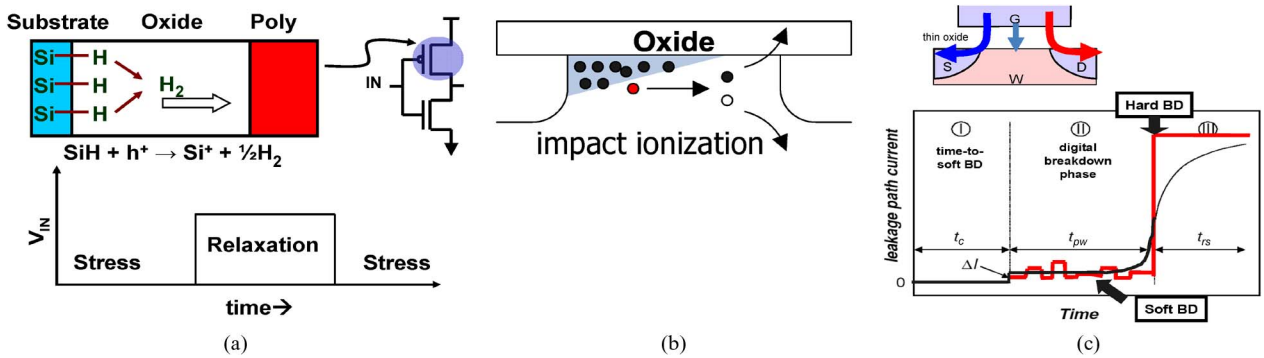

Fig. 5. ***Temporal variations: (a) NBTI degradation process in PMOS. Breaking of hydrogen bonds creates dangling Si that acts as a defect trap near Si–SiO$_2$ interface—increasing V_{TH} of the transistor. V_{TH} degradation and recovery mechanism under NBTI stress is also shown. (b) Impact ionization due to HCI. (c) Percolation path due to TDDB. The behavior of leakage current after soft and hard breakdown is also plotted.***

in the high electric field near the drain side of the MOSFET, resulting in impact ionization and subsequent degradation [as shown in Fig. 5(b)]. Historically, HCI has been more significant in NMOS because electrons have higher mobility than holes, and therefore, they can gain higher energy from the channel electric field. The interesting fact about HCI is that it has a faster rate of degradation compared to NBTI. Also, HCI occurs during the low-to-high transition of the gate of an NMOS, and hence the degradation increases for high switching activity or higher frequency of operation. Furthermore, the recovery in HCI is negligible, making it worse for alternating current (ac) stress conditions.

As technology is scaled (particularly supply voltage), HCI was expected to decrease and ultimately disappear. However, even at low supply voltages, carriers are being generated due to various mechanisms (e.g., electron–electron scattering or the impact ionization feedback [40]). Therefore, HCI is expected to be present even in scaled technologies.

TDDB [42]–[44], also known as oxide breakdown, is a source of significant reliability concern. When a sufficiently high electric field is applied across the dielectric gate of a transistor, continued degradation of the material results in the formation of conductive paths, which may shorten the anode and the cathode [42]. One such conducting path due to TDDB is shown in Fig. 5(c). This process is accelerated as the thickness of the gate oxide shrinks with continued device scaling. The short circuit between the substrate and gate electrode results in oxide failure. Once a conduction path forms, current flows through the path causing a sudden energy burst, which may cause runaway thermal heating. The result may be a soft breakdown (if the device continues to function) or hard breakdown (if the local melting of the oxide completely destroys the gate) [43], [44]. This is further illustrated by the behavior of leakage under stress in Fig. 5(c).

In an IC, the devices are exposed to different degradation due to operating conditions. For instance, in an inverter when the input signal is low, the PMOS is under NBTI stress and therefore degrades while the NMOS is turned off. When the input is pulled high, the NMOS goes through impact ionization condition and experiences HCI degradation. At the same time, PMOS is turned off and some of the NBTI damage relaxes. Since each degradation mechanism generates defects either in the bulk oxide or at the interface, the overall device degradation can be very complex [33].

Electromigration is the transport of material caused by the gradual movement of the ions in a conductor due to the momentum transfer between conducting electrons and diffusing metal atoms [45]. The resulting thinning of the metal lines over time increases the resistance of the wires and ultimately leads to path delay failures.

Voltage and temperature fluctuations: Temporal variations like voltage and temperature fluctuations add to the circuit marginalities. The higher temperature decreases the V_{TH} (good for speed) but reduces the ON current—reducing the overall speed of the design. Similarly, if a circuit that is designed to operate at 1 V works at 950 mV due to voltage fluctuations, then the circuit speed would go below the specified rate. Since the voltage and the temperature depend on the operating conditions, the speed becomes unpredictable.

III. EFFECT OF PARAMETER VARIATIONS ON LOGIC AND MEMORY—FAILURES AND PARAMETRIC YIELD

In the previous section, we considered various sources of variations coming from process as well as temporal fluctuation/degradation due to aging. This section will explore the effect of spatial and temporal variations on the failure of logic and memory (SRAM) elements.

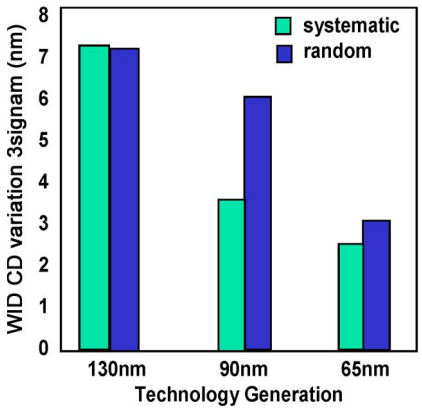

Fig. 6. ***Growing proportion of within-die process variation with technology scaling [59].***

A. Impact on Logic

1) Impact of Process Variation: The variation in L, W, T_{OX}, dopant concentration, work function, flatband condition, etc., modifies the threshold voltage of the devices. These are termed die-to-die V_{TH} variation. Other source of variation originates from LER, line width variation, random variation in dopant atoms in the channel, and it is known as within-die process variation. In older technology generations, the fraction of within-die variation used to be small compared to die-to-die counterpart. However, with scaling of device dimensions within-die parametric variation has become relatively larger fraction. This is shown in Fig. 6. In the following paragraphs, we will discuss the manifestation of various types of spatial process variations.

a) Increased delay and spread of delay distribution: One manifestation of statistical variation in V_{TH} is variation of speed between different chips. Hence, if the circuits are designed using nominal V_{TH} of transistors to run at a particular speed, some of them may fail to meet the desired frequency. Such variation in speed would lead to parametric yield loss. Fig. 7 shows how the variation in threshold voltage (under the influence of both within-die and die-to-die) translates into speed distribution. The path delay distribution can be represented by normal distribution or by a more accurate model like lognormal distribution. Several statistical static timing analysis techniques have been investigated in the past [25], [80]–[82], [152], [153] to accurately model the mean and STD of the circuit delay. Chips slower than the target delay have to be discarded (or can be sold at a lower price). An interesting observation is the impact of within-die and die-to-die process variation. It has been shown in [59] that the effect of within-die process variations tends to average out with the number of logic stages. This is shown in Fig. 8. However, the demand for higher frequency necessitates deeper pipeline design (i.e., shorter pipeline depths) making them susceptible to within-die process variation as well.

b) Lower noise margins: The variations have different impact on dynamic circuits. These circuits operate on the principle of *precharge* and *evaluate*. The output is precharged to logic "1" in the negative phase of the clock (clk = 0). The positive phase of the clock (clk = 1) allows the inputs to decide if the output will be kept precharged or discharged to ground. Since the information is saved as charge at the output node capacitor, dynamic logic is highly susceptible to noise and timings of input signals. Due to inherent nature of the circuit, a slight variation in transistor threshold voltage can kill the logic functionality. For example, consider a domino logic shown in Fig. 9. If the V_{TH} of the NMOS transistors in the second stage is low due to process variation, then a small change in Out_1, In_4, or In_5 can turn the pull down path ON and may result in wrong evaluation of Out_2.

In register files, increased leakage due to lower V_{TH} dies has forced the circuit designers to upsize the keeper to obtain an acceptable robustness under worst case V_{TH} conditions. Large variation in die-to-die V_{TH} indicates that 1) a large number of low leakage dies suffer from the performance loss due to an unnecessarily strong keeper,

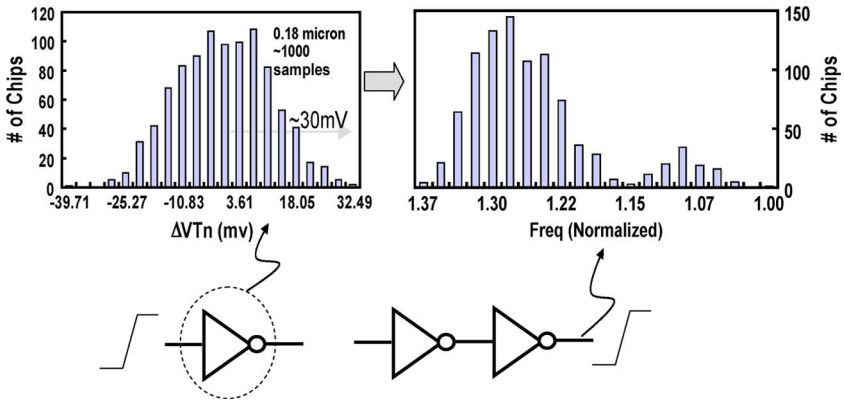

Fig. 7. ***Variation in threshold voltage and corresponding variation in frequency distribution [59].***

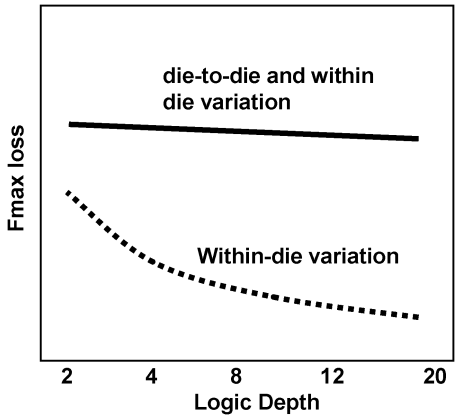

Fig. 8. *Impact of within-die process variation becomes prominent with increasing pipeline depth [59].*

while 2) the excess leakage dies still cannot meet the robustness requirements with a keeper sized for the fast corner leakage.

c) Degraded yield in pipelined design: Increasing interdie and intradie variations in the process parameters, such as channel length, width, threshold voltage, etc., result in large variation in the delay of logic circuits. Consequently, estimating circuit performance and designing high-performance circuits with high yield (probability that the design will meet certain delay target) under parameter variations have emerged as serious design challenges in sub-100-nm regime. In the high-performance design, the throughput is primarily improved by pipelining the data and control paths. In a synchronous pipelined circuit, the throughput is limited by the slowest pipe segment (i.e., segment with maximum delay). Under parameter variations, as the delays of all the stages vary considerably, the slowest stage is not readily identifiable. The variation in the stage delays thus results in variation in the overall pipeline delay (which determines the clock frequency and throughput). Traditionally, the pipeline clock frequency has been enhanced by: 1) increasing the number of pipeline stages, which, in essence, reduces the logic depth and hence, the delay of each stage; and 2) balancing the delay of the pipe

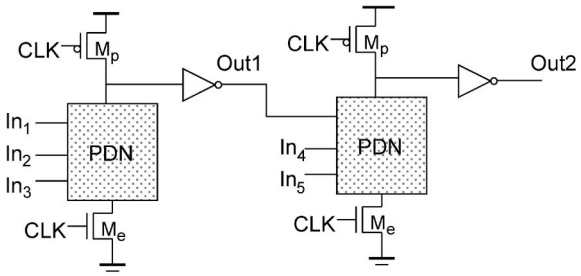

Fig. 9. *Example of a dynamic logic circuit. The V_{TH} of NMOS transistor determines the noise margin.*

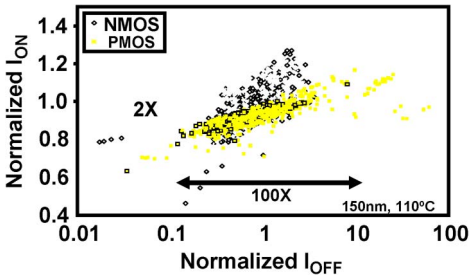

Fig. 10. *Leakage spread in 150-nm technology (source: Intel Inc.).*

stages, so that the maximum of stage delays is optimized. However, it has been observed that if intradie parameter variation is considered, reducing the logic depth increases the variability (defined as the ratio of STD and mean) [59]. Since the pipeline yield is governed by the yield of individual pipe stages, balancing the pipelines may not always be the best way to maximize the yield. This makes the close inspection of the effect of pipeline balancing on the overall yield under parameter variation an important task.

d) Increased power: Another detrimental effect of process variation is variation in leakage. Statistical variation in transistor parameters results in significant spread in different components of leakage. It has been shown in [5] that there can be ~100X variation in leakage current in 150-nm technology (Fig. 10). Designing for the worst case leakage causes excessive guard banding, resulting in lower performance. On the other hand, underestimating leakage variation results in low yield, as good dies can be discarded for violating the product leakage requirement. Leakage variation models have been proposed in [83]–[86] to estimate the mean and variance of the leakage distribution. In [86], the authors provide a complete analytical model for total chip leakage considering random and spatially correlated components of parameters, sensitivity of leakage currents with respect to transistor parameters, input vectors, as well as circuit topology (spatial location of gates, sizing, and temperature).

e) Increased temperature: A side effect of increased dynamic and leakage power is localized heating of the die-called hot spot. A hot spot is the outcome of excessive power consumption in certain section of the circuit. The power dissipates as heat and if the package is unable to sink the heat generated by the circuit, then it is manifested as elevated temperature. The hot spots are one of the primary factors behind reliability degradation and thermal runaways. There have been several published efforts in compact and full-chip thermal modeling and compact thermal modeling. In [87], the authors present a detailed die-level transient thermal model based on full-chip layout, solving temperatures for a large number of nodes with an efficient numerical method. The die-level thermal models in [88] and [89] also provide the detailed temperature distribution across the silicon die. A detailed full-chip thermal model

proposed in [90] uses an accurate 3-D model for the silicon and 1-D model for the package. A recent work [91] describes HotSpot, a generic compact thermal modeling methodology for VLSI systems. HotSpot consists of models that consider high-level interconnects, self-heating power, and thermal models to estimate the temperatures of interconnect layers at the early design stages.

2) Impact of Temporal Degradation: Temporal variations like voltage and temperature fluctuations add to the circuit marginalities. The higher temperature decreases the V_{TH} (good for speed) but reduces the ON current—reducing the overall speed of the design. Similarly, voltage fluctuation modifies the circuit delay and degrades robustness by reducing the noise margin. A higher voltage speeds up the circuit while a lower voltage slows down the system. Since the voltage and the temperature depend on the operating conditions, the circuit speed becomes unpredictable.

The aging-related temporal variations, on the other hand, affect the circuit speed systematically over a period of time. In random logic, the impact of NBTI degradation is manifested as the increase of delays of critical timing paths [21], [24], [28], [31], [32], [34]–[38] and reduction of subthreshold leakage current [36]. In [30] and [37], the authors developed a compact statistical NBTI model considering the random nature of the Si–H bond breaking in scaled transistors. They observed that from the circuit level perspective, NBTI variation closely resembles the nature of RDF-induced V_{TH} variation in a sense that it has a complete randomness even among the transistors that are closely placed in the same chip. Hence, they considered both the RDF- and the NBTI-induced V_{TH} variation (σ_{RDF} and σ_{NBTI}, respectively) as follows:

$$\sigma_{Vt} = \sqrt{\sigma_{RDF}^2 + \sigma_{NBTI}^2(t)} \tag{1}$$

where σ_{VTH} represents the total V_{TH} variation after time t.

Fig. 11(a) represents the histogram of a simple inverter delay with/without the impact of NBTI variation assuming three-year stress [for 32-nm predictive technology model (PTM) [92] using Monte Carlo and (1)]. As can be observed from the two curves on the right, the variability of gate delay can increase significantly with an added impact of NBTI. Comparison between 32- and 22-nm node results emphasizes the fact that NBTI variations will grow larger in scaled technology. It is important to note that in reality the variations of circuit delays are mostly dominated by lower granularity sources such as interdie variations. As a result, random V_{TH} variation induced by NBTI degradation will usually take only a small portion of the overall delay variations [93]. Similar effects can be observed in the subthreshold leakage variation under NBTI degradation. Fig. 11(b) represents the histogram plot of inverter leakage. As can be observed, leakage current reduces due to the NBTI. However, the two curves on the left-hand side show that the increased variability of V_{TH} due to NBTI can lead to more variation in leakage.

B. Impact on SRAM

1) Impact of Process Variation in 6T SRAM Cell

a) Parametric failures: The interdie parameter variations, coupled with intrinsic on-die variation in the process parameters (e.g., threshold voltage, channel length, channel width of transistors) result in the mismatches in the strength of different transistors in an SRAM cell. The device mismatches can result in the failure of SRAM cells. Note that random variations (such as RDF and LER) affect SRAM cells more than logic since the transistors are of minimum size in SRAM cells for higher density requirement. The parametric failures in SRAM cells are principally due to:

- destructive read (i.e., flipping of the stored data in a cell while reading—known as read failure R_F);
- unsuccessful write (inability to write to a cell—defined as write failure W_F);

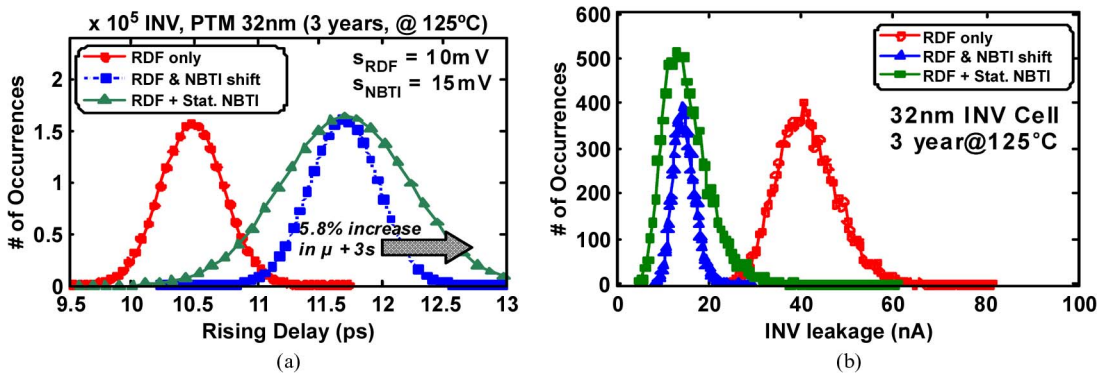

Fig. 11. ***Variation under NBTI degradation and RDF (a) both the mean and spread of inverter gate delay distribution increase due to combined effect of RDF and NBTI. (b) inverter leakage is reduced with NBTI, however, the spread of leakage can increase due to statistical NBTI effect.***

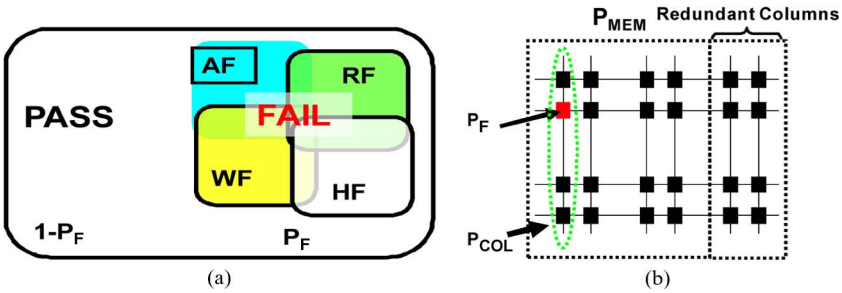

Fig. 12. *(a) Overall cell failure probability due to combined effect of read, write, access, and hold failures. (b) Memory array equipped with redundant columns for repair.*

- an increase in the access time of the cell resulting in violation of the delay requirement—defined as access time failure A_F;
- destruction of the cell content in standby mode with the application of lower supply voltage (primarily to reduce leakage in standby mode)—known as hold failure H_F.

The above mentioned failure probabilities in the memory design space are shown in Fig. 12(a). As evident from the figure, the overall failure probability is the union of individual parametric failures. Most of the advanced memory architectures are equipped with row or column redundancies in order to preserve the health of array under various defects and failures. The memory failure probability in presence of redundant columns is given by

$$\begin{aligned}
P_F &= P[\text{Fail}] \\
&= P[A_F + R_F + W_F + H_F] \\
&= P_{AF} + P_{RF} + P_{WF} + P_{HF} - P[A_F R_F] \\
&\quad - P[A_F W_F] - P[A_F H_F] - P[R_F W_F] \\
&\quad - P[R_F H_F] - P[W_F H_F] + P[A_F R_F W_F] \\
&\quad + P[A_F W_F H_F] + P[W_F R_F H_F] \\
&\quad + P[A_F W_F H_F] - P[\text{all}] \\
P_{\text{COL}} &= 1 - (1 - P_F)^{N_{\text{ROW}}} \\
P_{\text{MEM}} &= \sum_{i=N_{\text{RC}}+1}^{N_{\text{COL}}+N_{\text{RC}}} \binom{N_{\text{COL}} + N_{\text{RC}}}{i} P_{\text{COL}}^{i} \\
&\quad \times (1 - P_{\text{COL}})^{N_{\text{COL}}+N_{\text{RC}}-i}
\end{aligned}$$

where N_{ROW}, N_{COL}, and N_{RC} are the numbers of row, columns, and redundant columns in the array, respectively [Fig. 12(b)]. P_F is the cell failure probability which is given by the union of access, read, write, and hold failure probabilities. P_{COL} is the column failure probability which is determined by the cell failure probability (P_F) and numbers of cells in the column (i.e., N_{ROW}). Finally, P_{MEM} is the memory (array) failure probability which is given by the column failure probability (P_{COL}), number of columns (N_{COL}), and number of redundant columns (N_{RC}).

It has been observed that the interdie shift in V_{TH} can amplify the effect of random variation. At low interdie V_{TH} corners, read (lower static noise margin) and hold (higher leakage) failures are more probable. At high interdie V_{TH} corners, write and access failures (reduction in the current of access transistors) are expected [94]–[96] [Fig. 13(a)]. Based on this observation, the interdie V_{TH} shift versus memory failure probability plot in Fig. 13(b) is divided into three regions A, B, and C. At nominal V_{TH} corner [region B in Fig. 13(b)], low cell failure probability makes memory failure unlikely as most of the faulty cells can be replaced using redundancy. However, SRAM dies with negative and positive interdie V_{TH} shifts larger than a certain level are very likely to fail [high memory failure probability regions A and C in Fig. 13(b)]. A failure in any of the cells in a column (or a row) of the memory will make that column (or a row) faulty. If the number of faulty columns (or rows) in a memory chip is larger than the number of redundant columns (or rows), then the chip is considered to be faulty [95].

In addition to dynamic failure probability models as described above, several static noise margin (SNM)-based models have been proposed in [156]–[162]. Determination of memory failure probabilities using Monte Carlo analysis is usually a simulation time intensive process. Important point sampling and fast estimation of memory failure probabilities have been proposed in [163]–[165].

b) Pseudoread: Another important failure model for SRAMs (especially low-voltage SRAMs) that has not been covered in the previous paragraphs is the pseudoread problem. Fig. 14 illustrates this problem with an example of a 4×4 bit^2 array where the word size is assumed to be 1 bit. When the word line is enabled to read address 0, the neighboring cells (belonging to different word) go through read disturbance. The three neighboring cells should be robust enough to sustain possible retention/weak write failures.

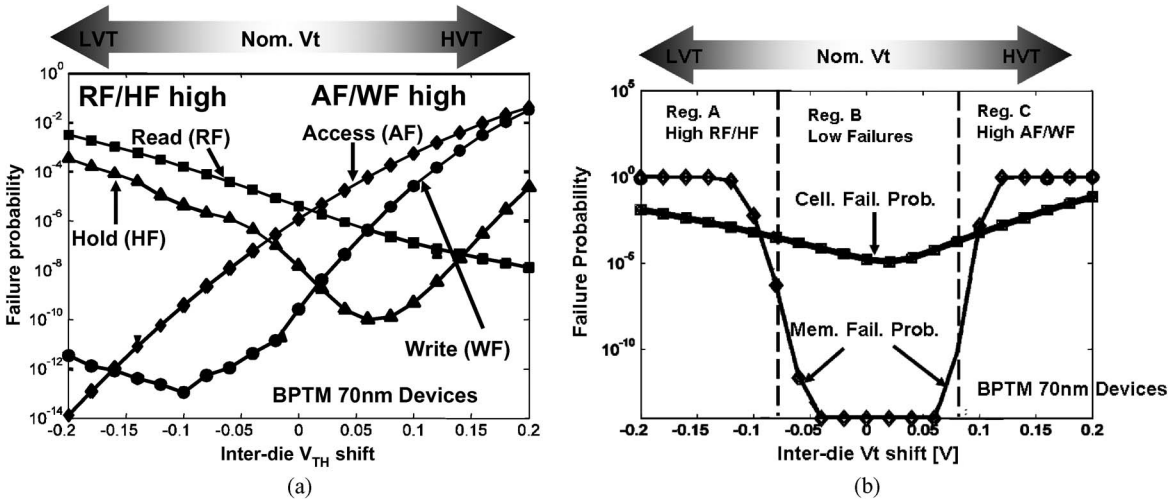

Fig. 13. ***(a) Impact of variations on cell failure probabilities (RF-read failure, WF-write failure, HF-hold failure, AF-access failure). (b) Impact of variations on memory array failure probabilities. Memory failure probability is higher at the high and low V_{TH} interdie corners that can be mitigated by ABB.***

In the next section, we will discuss optimization of SRAM cell (transistor sizes) and array (organization and redundancy) to minimize the memory failure probability due to random intradie variation [95] for improved yield. Post-Si adaptive techniques for self-repair and various assist techniques will be discussed as well.

2) Impact of Temporal Degradation in Memory: As noted previously, parametric variations in memory arrays due to local mismatches among six transistors in a cell can lead to failures. As a result, NBTI degradation, which only affects the PMOS transistors [PL and PR in Fig. 15(a)] can have a prominent effect in SRAM parametric failures. Therefore, an SRAM array with perfect SNM may experience failures after few years due to temporal degradation of SNM. Simulation results obtained for a constant ac stress at a high temperature show that SNM of an SRAM cell can degrade by more than 9% in three years. Considering the dependency of degradation with respect to signal probability (signal probability is defined as the probability that the signal is equal to logic "1"), the PMOS which is ON for longer than the other PMOS can experience more degradation. This further increases the mismatch and degrades SNM. A typical example is a bit cell storing a constant data for a long period of time. It has been observed [38] that SNM degradation severely increases (almost by 30%) with unmatched signal probabilities.

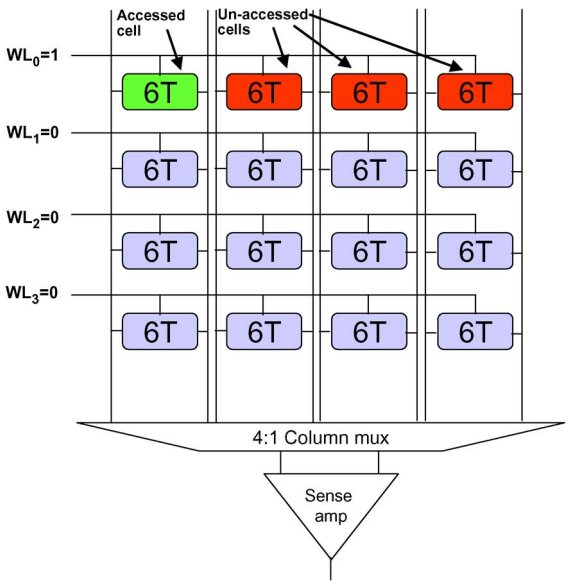

Fig. 14. ***Half select issue due to column multiplexing. The unselected words (highlighted in red) experience read disturbance when a particular word is being written.***

Weaker PMOS transistors (due to NBTI) can manifest itself as increased read failures. On the other hand, it also enables faster write operation, reducing statistical write failure probability [37]. The results using Hspice are shown in Fig. 15(b) for three different conditions: 1) only RDF, 2) static NBTI shift with RDF, and 3) statistical NBTI variation combined with the RDF. Comparison between conditions 2) and 3) shows that the impact of NBTI variation can significantly increase the read failure probability of an SRAM cell [38]. In contrast to the read operation, write function of an SRAM cell usually benefits from the NBTI degradation. Due to NBTI, PMOS pull-up transistor PL [Fig. 15(c)] become weaker compared to the access transistor AXL, leading to a faster write operation. Fig. 15(c) shows the temporal change of the mean and the STD of write access time under NBTI. It is interesting

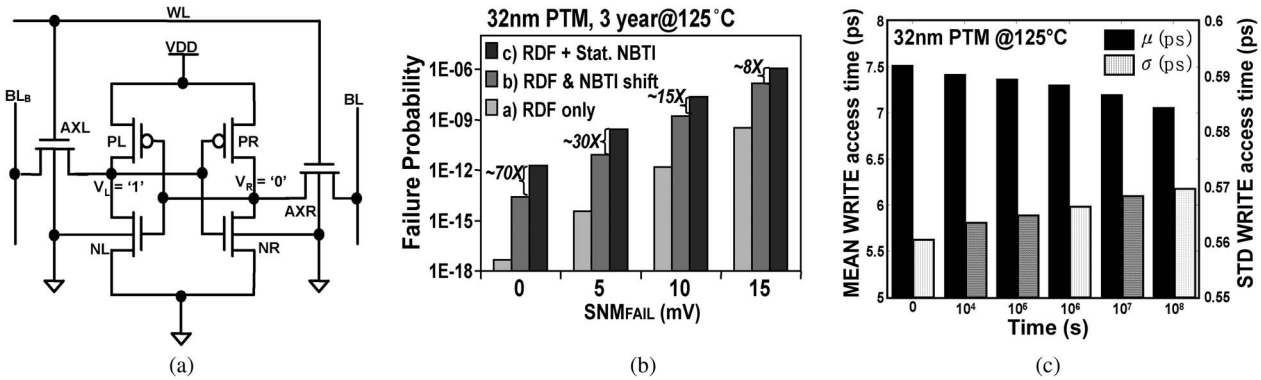

Fig. 15. ***(a) 6T SRAM bit-cell schematic. (b) SRAM read failure probability after a three-year NBTI stress. The failure probability increases due to combined RDF and NBTI. (c) Variation in write access time under temporal NBTI variation. The mean write time reduces but the spread increases.***

to note that although the mean access time reduces with time, STD of access time increases due to the impact of temporal NBTI variation. Hence, there is a need to consider NBTI variation for temporal SNM analysis.

IV. VARIATION-TOLERANT DESIGN

In the previous section, we discussed failures and yield loss in logic and memories due to variations. This section will provide some advanced circuit and microarchitectural techniques for resilience to parameter variations. These techniques can be broadly categorized as design-time (pre-Si) and runtime (post-Si) techniques as shown in Fig. 16. For logic circuits, gate sizing [54]–[57], dual V_{TH} assignment [46]–[53], body biasing [59], RAZOR [64]–[68], CRISTA [74], Trifecta [97], ANT [75], ReVIVaL [72], [73], variable latency functional units [69]–[71], etc., can be employed, whereas for memories, transistor sizing [95], body biasing [94], [98], source biasing [99], 8T/10T bit cell [100]–[104] configurations, adaptive cache resizing [105], and read and write assist techniques [106]–[114] are few of the techniques that can lead to improved yield.

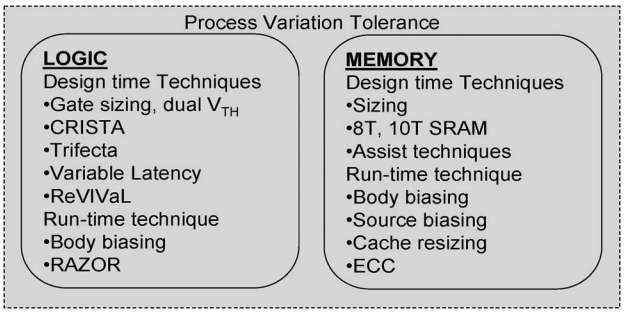

Fig. 16. ***Overview of process invariant logic and memory design techniques. Both design time as well as runtime techniques have been shown.***

In the following sections, first, we describe process-tolerant SRAMs. Then, we present various methodologies for process-tolerant logic/system design.

A. SRAM

1) Circuit Level Techniques

a) Sizing [95], [144]: The length and width of different transistors of the SRAM bit cell [access, pull-up and pull-down transistors of Fig. 15(a)] affect the cell failure probability principally by modifying: 1) the nominal values of access time (T_{ACCESS}), trip point of the inverter (V_{TRIP}) and read voltage (V_{READ}), write time (T_{WRITE}), and minimum retention voltage (V_{DDHmin}) [95]; 2) the sensitivity of these parameters to V_{TH} variation, thereby changing the mean and the variance of these parameters; and 3) the STD of the V_{TH} variation. The impact of variation of strength of different transistors on the various cell failure probabilities can be summarized as follows [95].

1) A weak access transistor reduces read failure probability (P_{RF}); however, it increases access failure probability (P_{AF}) and write failure probability (P_{WF}) and has minimal impact on hold failure probability (P_{HF}) [Fig. 17(a)]. Intuitively, it means that the weak access transistor cannot flip the cell content—which is good for read but bad for write.
2) Reducing the strength of the pull-up transistors reduces P_{WF}, but increases P_{RF}. P_{AF} does not depend strongly on PMOS strength, but P_{HF} degrades [Fig. 17(b)]. Therefore, weak pull-up is good for write (cell is easy to write) but bad for read (cell content can flip).
3) Increasing the strength of pull-down NMOS transistors reduces P_{RF} and P_{AF}. Increase in width of NR has little impact on P_{WF}. However, increasing Lnpd reduces both T_{WRITE} (by increasing the trip point of PR-NR) and σ_{VTH} of NR, which results in a significant reduction in P_{WF} [Fig. 17(c)].

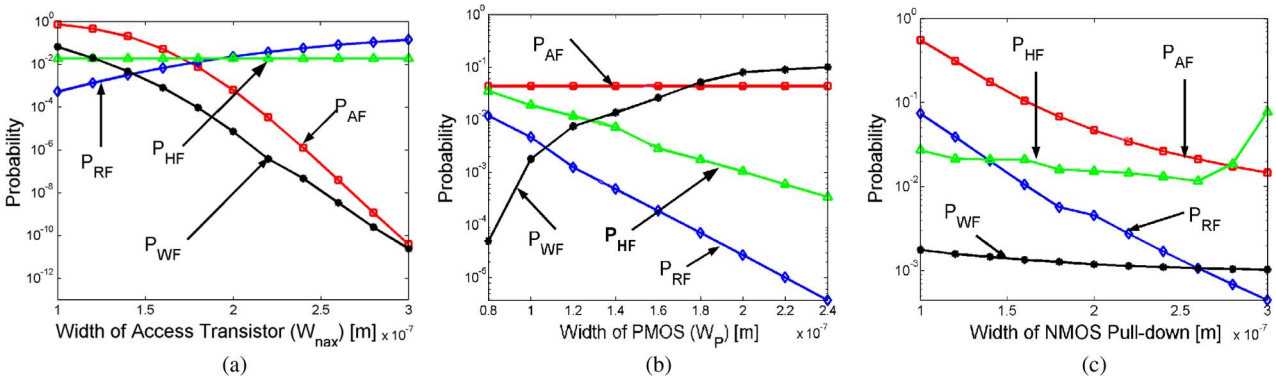

Fig. 17. ***Impact of sizing on cell failure probabilities. (a) Access transistor width (W_{nax}). (b) Pull-up transistor width (W_{pup}). (c) Pull-down transistor width (W_{npd}). The nominal size (W/L) of access transistor is 150/50 nm, pull-down transistor is 200/50 nm, and pull-up transistor is 100/50 nm.***

From the above discussions, it is obvious that the choice of the transistor sizes has a strong impact on the failure probability and the array yield. Such information can be used for statistical optimization of transistor sizes in order to maximize the yield.

b) Body bias [94], [98]: Transistor threshold voltage is a crucial parameter that dictates the memory failures. As discussed earlier, the threshold voltage can be modified by tuning or biasing the body potential. It can be noticed from Fig. 13(b) that reducing read/hold failures in the dies at low-V_{TH} corners (region A) and access/write failures in the dies at high-V_{TH} corners (region C) can improve yield. In other words, if it is possible to move the dies from regions A and C to region B, then higher yield can be obtained. One possible way to achieve this would be to modulate the V_{TH} of the transistors by applying body bias. Although the parametric failures occur due to V_{TH} mismatch among the transistors in the 6T cell, however, as evident from Fig. 13(a) and (b), the failures are also highly correlated with the V_{TH} of the die itself. Fig. 18(a) shows that forward body bias (FBB) reduces access/write failures and reverse body bias (RBB) reduces read/hold failures [94]. Therefore, parametric yield of the memory can be improved by FBB to high-V_{TH} dies of region C and RBB to low-V_{TH} dies of region A. Based on the above observations, a self-repair technique for SRAM has been proposed [98]. As shown in Fig. 18(b), the interdie V_{TH} corner of an SRAM die is detected by monitoring the leakage of the entire array using an on-chip leakage sensor. The output of the leakage sensor (V_{Out}) is an indication of the interdie V_{TH} corner of the die. This output is compared against two reference voltages to decide if the die would be subjected to forward bias or reverse bias. The leakage simulation of 1-KB array under interdie and intradie V_{TH} shift indicates that the array leakage can indeed be used to determine the global process corner of the chip. Fig. 18(c) shows three distinct peaks of memory array leakage for three different dies belonging to low, nominal, and high

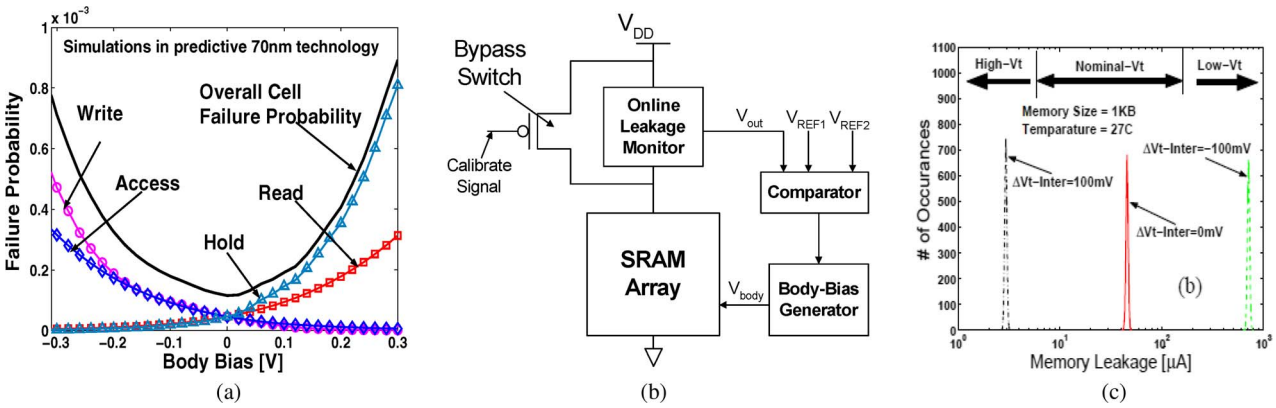

Fig. 18. ***(a) Impact of body bias on memory failure probability. (b) Adaptive source bias for robust and low-power memory. The FBB and RBB are controlled by array leakage. (c) Three distinct peaks of array leakage show that they can be used for identification of global process corner.***

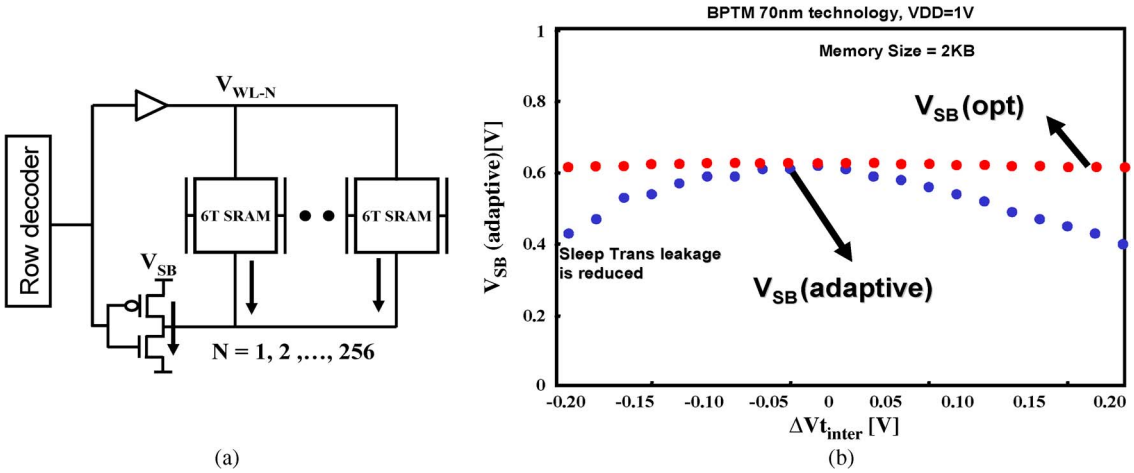

Fig. 19. *(a) Source biasing technique. The source line of the bit cells is elevated using sleep transistor when the row is not accessed. (b) Adaptive source bias for robust and low power memory. Low amount of source bias is applied to the dies at high and low V_{TH} skews for robustness.*

interdie V_{TH} corners. Note that the self-repair scheme reduces the effect of interdie V_{TH} shift of a die (not intradie variation) using body bias. This dramatically suppresses the dominant types of failures in that die, resulting in fewer parametric failures. Simulations in a predictive 70-nm technology show 5%–40% improvement in SRAM yield. However, it is important to note that the body effect coefficient decreases over the technology generations, and therefore, the impact of body bias for tuning the V_{TH} of the transistors is expected to diminish.

c) Source bias [99], [106]: Potential of the source terminal is an effective knob to control memory leakage and retention failures. In source biasing scheme [as shown in Fig. 19(a)], when a particular row is accessed, the source line is biased to zero, which increases the drive current and achieves fast read/write operation. When the row is not accessed, the source line voltage is raised to V_{SB}, which substantially reduces both the subthreshold and gate leakage during the inactive periods [106]. Although increasing the source-bias voltage of source line in SRAM array reduces the leakage power, the probability of retaining the data at the standby mode decreases (Hold failure). The principal reason of hold failure in SRAM cell is the intradie variation in threshold voltage (due to RDF) [6]. Since the source voltage is elevated, the node storing a "0" [Fig. 19(a)] rises to V_{SB}. At the same time, the NMOS of node storing "1" (NL) weakly turns ON. If intradie process variation favors to pull up the right-hand side node (storing a "0") and decreases the trip point of the left-hand side inverter (storing a "1"), the data can flip. However, the interesting point to note is that the die-to-die variation in V_{TH} on top of it can aggravate or attenuate the effect the intradie V_{TH} variation has on hold failures. It has been shown in [99] that the dies belonging to high as well as low V_{TH} corners suffer from hold failures. Therefore, source biasing based on nominal corner analysis will result in suboptimal savings in power or high degree of retention failure. In [99], the effects of source bias have been investigated on memory failure under process variation to reduce leakage while maintaining its robustness. The authors have proposed an adaptive source-biasing (ASB) scheme to minimize leakage while controlling the hold failures. As shown in Fig. 19(b), the dies at fast and slow corners have less amount of source bias applied compared to the dies at nominal V_{TH} corner. This is achieved by a self-calibrating design that determines the appropriate amount of source bias for each die using built-in self-test (BIST) [167]. Note that the presence of the sleep transistor [NMOS in Fig. 19(a)] increases the memory access time. However, the sleep transistor can be sized appropriately to optimize the performance loss. The write operation becomes better due to presence of the stacked transistor in the pull-down path. Simulation results show that ASB can result in 7%–25% reduction in the number of chips failing to meet leakage bound compared to zero source-biased SRAM. Simultaneously, with ASB, the number of chips failing in the hold mode is reduced by 7%–85% compared to SRAMs with fixed (optimum at nominal V_{TH} corner) source biasing.

It is worth noting the fact that source biasing is based on the stacking effect and it has a similar effect as supply scaling. Since it reduces gate leakage, subthreshold leakage as well as bit-line leakage (due to negative V_{GS}), source bias is considered to be more scalable than the body-bias technique.

d) 8T and 10T bit-cell configurations [100]–[104], [115]: As we have noticed from the earlier discussions, the fundamental problem in 6T SRAM cell is that the read and write operations do not go hand-in-hand. A cell having lower read SNM may have improved writability and *vice versa*. Hence, if the read and write operations are decoupled, the designers will have better flexibility in

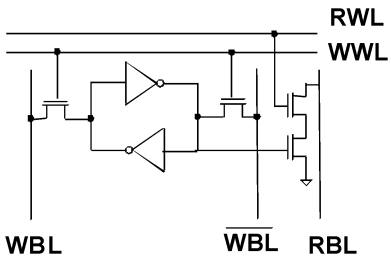

Fig. 20. *8T SRAM bit cell [100].*

optimizing the read and write operations independently. To that effect, 8T and 10T SRAM bit cells have been proposed to isolate the read from the write for achieving better stability while simultaneously enabling low-voltage operations. Fig. 20 shows an 8T bit-cell configuration. Adding two FETs to a 6T bit cell provides a read mechanism that does not disturb the internal nodes of the cell [100]. This requires separate read and write word lines (RWL, WWL) and can accommodate dual-port operation with separate read and write bit lines as shown in Fig. 20. Ignoring read disturb failures, the worst case stability condition for an 8T cell is that for two cross-coupled inverters, which provides a significantly larger SNM (~3X). A dramatic stability improvement can thus be achieved without a tradeoff in performance since a read access is still performed by two stacked nFETs. The area penalty of this bit cell is shown to be only ~30%. Although more robust than the standard 6T SRAM, this bit cell is still prone to pseudoread issue because the read word line is shared by more than one word in the row.

To increase the read SNM and simultaneously enable subthreshold operations, 10T [101] SRAMs have been explored. In these schemes, data nodes are fully decoupled from read access. This ensures read SNM to be almost the same as hold SNM, improving read stability remarkably. In addition, supply power gating and long-channel access transistors [101] also have been proposed for writability improvement. The 10T bit cell proposed in [101] is shown in Fig. 21. It uses transistors M7–M10 to remove the problem of read SNM by buffering the stored data during a read access. Thus, the worst case SNM for this bit cell is the hold SNM related to M1–M6, which is the same as the 6T hold SNM for same-sized M1–M6. M10 significantly reduces leakage power relative to the case where it is excluded. However, due to single-ended implementation of read path, the current 10T SRAM bit cells [100], [101] suffer from poor bit-line swing and pseudoread. In order to avoid the pseudoread, bit cells sharing the word line are written at the same time. But this scheme does not allow bit interleaving, therefore making the array susceptible to soft errors.

As noted before, a write operation imposes pseudoread of the unselected columns resulting in read disturbance. In [115], the authors proposed read after write to enable bit interleaving while avoiding the pseudoread. Under this scheme, the write in one word is followed by the read of the neighboring words. Once the neighboring words are read, the same data are forced on the corresponding bit lines. Although the array becomes immune towards soft error and pseudoread, the power consumption increases due to the extra read associated with every write operation.

A new differential 10T SRAM cell is proposed in [102] for better read SNM while allowing bit interleaving and avoiding pseudoread (Fig. 22). In read mode, WL is enabled and VGND is forced to 0 V while W_WL (write word line) remains disabled. The disabled W_WL makes data nodes ("Q" and "QB") decoupled from bit line during the read access. Due to this isolation, the read SNM is almost the same as the hold SNM of conventional 6T cell. Since the hold SNM is much larger than the read SNM in the 6T cell, read stability is remarkably improved. During write mode, both WL and W_WL are enabled to transfer the write data to cell node from bit lines. Due to series access transistors, writability is a critical issue. Therefore, VWL and VW_WL are boosted to compensate for weak writability. Silicon measurement shows that the 10T array can operate at as low as ~200 mV of supply voltage with 53% area overhead compared to 8T [100] bit cell and with comparable leakage power as in 6T array. The advantages of this bit-cell structure

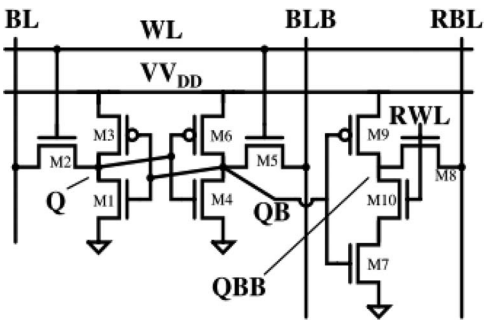

Fig. 21. *10T SRAM bit cell [101].*

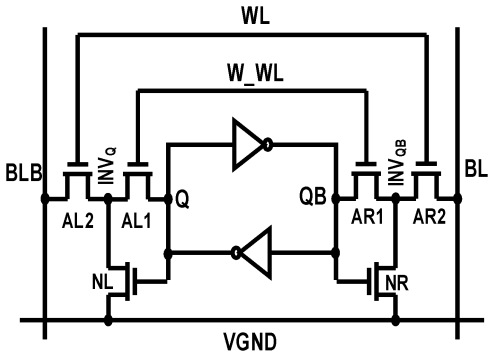

Fig. 22. *Another 10T SRAM bit cell [102].*

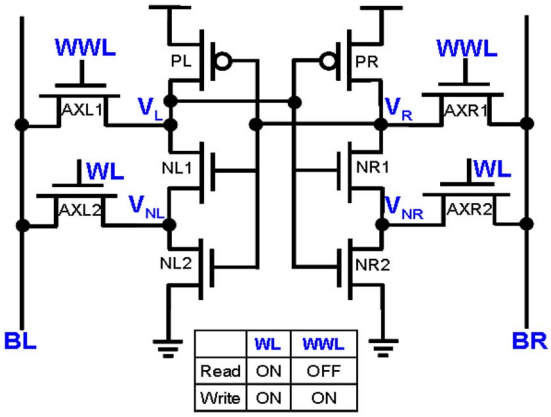

Fig. 23. *ST-based 10T SRAM bit cell [103], [104].*

are multifold. It allows the bit interleaving with the columnwise write access control while having differential read path. Due to the columnwise write, this bit cell is free of pseudoread problem. Furthermore, the differential read and dynamic differential cascade voltage switch logic (DCVSL) read scheme allows this bit cell to achieve large bit-line swing despite of extreme process and temperature variations.

Another 10T structure uses the Schmitt trigger (ST) concept [103], [104] that improves both read and write concurrently. In the ST bit cell, transistors PL-NL1-NL2-AXL2 form one ST inverter while PR-NR1-NR2-AXR2 forms the other ST inverter (Fig. 23). Feedback transistors AXL2/AXR2 raise the switching threshold of the inverter during the $0 \rightarrow 1$ input transition providing the Schmitt trigger action. During the read operation, WL is ON while WWL (write word line) is OFF. Let us say that the left-hand side node VL is storing logic "0" and the right-hand side node VR is storing logic "1." In order to avoid a read failure, the voltage at node storing logic "1" should be preserved. The feedback mechanism provided by the transistors (AXL2/AXR2) tries to maintain logic "1" giving improved read stability (~58%). During the hold mode, the feedback mechanism is absent. Hence hold SNM in the proposed ST bit cell is similar to the conventional 6T cell. Feedback NMOS (AXL2/AXR2) can track pull-down NMOS (NL2/NR2) variations across the process corners giving improved process variation tolerance. Further, the storage node is isolated from the read current path resulting in reduced capacitive coupling from the switching WL. With the same number of NMOS in the read path, the read current in ST cell is the same as the 6T cell. During the write operation, both word lines are ON. Series connected pull-down NMOS results in raising the voltage at node storing "0" which is higher than the corresponding 6T cell. As a result, ST cell flips at a much higher bit-line voltage compared to 6T cell giving higher (~2X) "write trip point." Thus, the ST bit-cell design can improve readability and writability simultaneously unlike the conventional 6T cell. Note that the above mentioned 8T and 10T SRAMs not only improve the process reliance but also enable the array operation in the subthreshold region.

e) Read/write assist [107]–[114]: Contrary to the principle of bit-cell tuning for better robustness, several assist techniques [107]–[114] have been proposed for the read/write compensation. The assist techniques tune the bit-cell supply, word-line voltage, and bit-line voltage in order to improve the read/write margins and V_{DDmin} (i.e., minimum supply at which the array is functional).

One particular read assist technique involves modulating the word-line voltage or pulse width. This technique decreases the failure rates by reducing the duration or strength of bit-line influence on the internal nodes during the read cycle. The duration of the word-line pulse can be shortened, which reduces the amount of time that read stress is applied to cells and thus reduces failure rates. Read margin can also be boosted by reducing the strength of the access transistor, preventing read disturbance. One such read assist circuit utilizes multiple NMOS pull-down transistors, called replica access transistors which are applied at the source of the word line [110]. A pull-up passive resistance element is also applied at the source. This reduces the circuit sensitivity to temperature variation that is observed in conventional circuits.

Reduction in SRAM cell supply voltage improves write margins by reducing the overdrive voltage of the PMOS pull-up transistors. This enables flipping of the high internal node more easily. The virtual supply can be reduced by dividing the array into subarrays and dropping the voltage of only the columns that are being written [107]. A similar scheme utilizes the capacitive ratio between the array cell voltage and a dummy voltage line to rapidly lower the cell voltage [110]. Bit-line signals can also be modified in duration or intensity to influence the read and write margins of the cells. Lowering the bit-line voltage improves read margins and is optimal at a precharge value of $V_{DD} - V_{TH}$ [112]. Column sense amplifiers can be implemented in each column to provide full bit-line amplification to improve read stability [111]. Another approach is a pulsed bit-line (PBL) scheme, where the BL voltage is reduced by 100–300 mV just prior to the activation of the WL [113]. This reduces both the cell read current and the charge sharing between the bit line and the storage node. During the write operation, PBL is applied to half selected cells (i.e., cells sharing the same WL but belonging to the unselected columns). This scheme significantly improves the read failure rate. Fig. 24 summarizes the above mentioned assist techniques.

2) Architectural Techniques for Robust Memory Design

a) Cache resizing [105]: Variation tolerance with graceful degradation in performance can be achieved by considering cache memory design at a higher level of design abstraction. In [105], a process-tolerant cache architecture suitable for high-performance memories has been

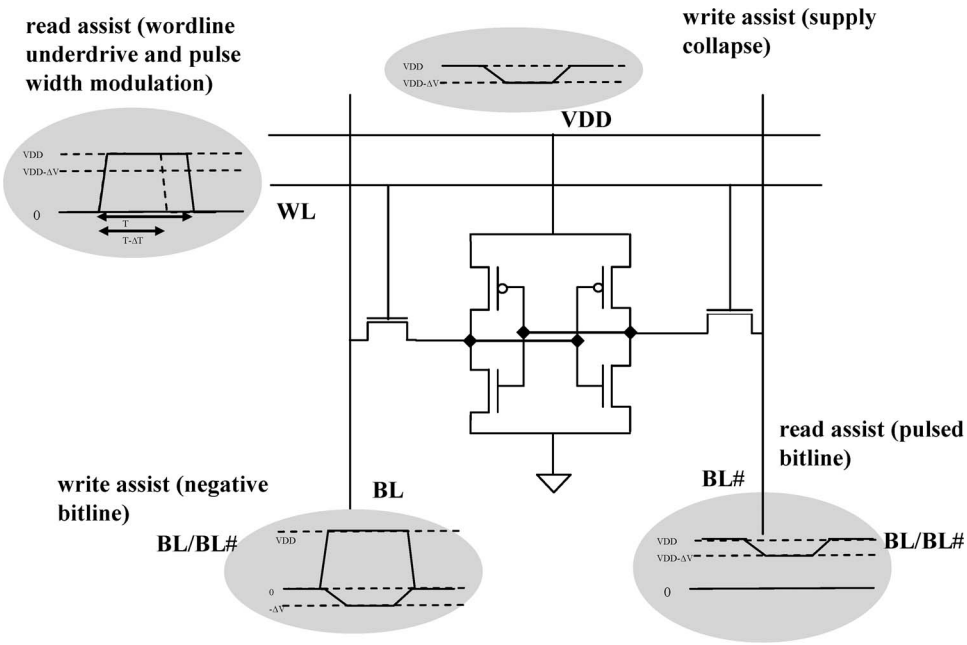

Fig. 24. *Assist schemes for 6T SRAM.*

proposed to detect and replace faulty cells by adaptively resizing the cache. Fig. 25 shows the anatomy of the cache architecture. It assumes that the cache is equipped with an online BIST to detect faulty cells (due to process variation) and a configurator for remapping of the faulty block. The proposed scheme then downsizes the cache by forcing the column MUX to select a nonfaulty block in the same row if the accessed block is faulty. In order to map the faulty block to the fault-free block permanently, the tag array width is expanded by extra two bits (assuming that four

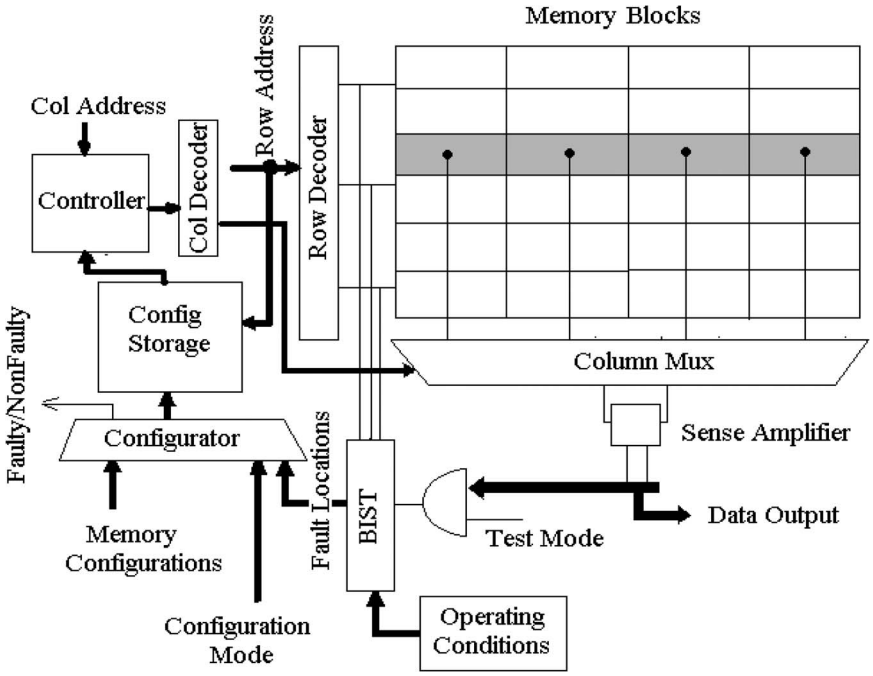

Fig. 25. *Cache resizing for process tolerance [105].*

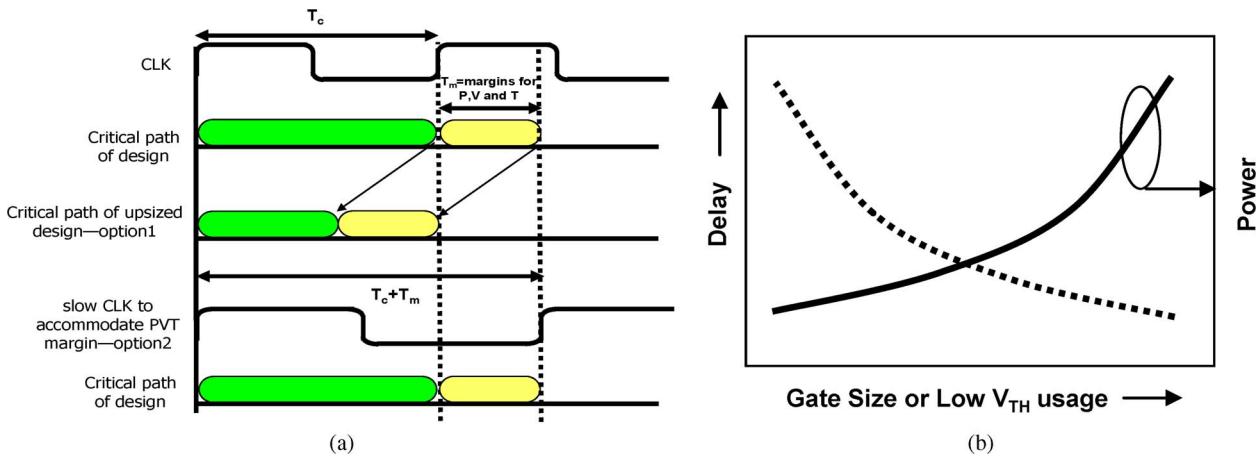

Fig. 26. *(a) Two possible options to tolerate process, voltage, and temperature fluctuation-induced timing uncertainties, namely, upsizing of devices and slow down of clock frequency. (b) Tradeoff between power and delay in conservative design approach.*

blocks share a column multiplexer). These extra bits are set to appropriate values by the configuration controller to ensure that a cache miss occurs when the fault-free block (where the faulty block is mapped) is accessed. This architecture has high fault-tolerant capability compared to contemporary fault-tolerant techniques, with minimum energy overhead and it does not impose any cache access time penalty. This scheme maps the whole memory address space into the resized cache in such a way that resizing is transparent to the processor. Hence, the processor accesses the resized cache with the same address as in a conventional architecture. By employing this technique, Agarwal *et al.* [105] achieve high yield under process variation in 45-nm predictive technology.

b) Cache line deletion [116], [117]: Cache line deletion is based on the fact that the faulty cache line (due to parametric/hard errors) can be marked and excluded from normal cache line allocation and use. An "availability bit" may be attached to each cache tag [116] to determine the faulty cache. Any cache line with the availability bit turned off is faulty and is not used. A similar strategy has been employed in IBM's Power4 processor, which can delete up to two cache lines in each L3 cache slice [117].

B. Process-Tolerant Logic Design

1) Circuit Level Techniques

a) Conservative design: Conservative approach to design circuits is based on providing enough timing margins for uncertainties, e.g., process variation, voltage/temperature fluctuations, and temporal degradation [T_m as shown in Fig. 26(a)]. One possible option is to conservatively size the circuit to meet the target frequency after adding all margins or boosting up the supply voltage. This is shown in Fig. 26(a) as option-1. However, from Fig. 26(b), it is obvious that such a conservative approach is area and power intensive. Supply voltage and circuit size upscaling increases the power consumption. One can definitely trade power/area by slowing down the clock frequency (option-2). However, this upfront penalty cannot be accepted in today's competitive market where power and operating frequency are the dominating factors. From the above discussions, it is apparent that conservative design approach is not very desirable in scaled technologies.

b) Statistical design

Logic sizing [54]–[57]: It is well known that the delay of a gate can be manipulated by modifying its size. Either the length or the width of the gate can be tweaked to modulate the (W/L) ratio and control its drive ability. Since process variations may increase the delay of the circuit, many design time transistor sizing algorithms have been proposed in [54]–[57] to reduce the mean and STD of delay variations. In [56], the authors propose a statistical design technique considering both interdie and intradie variations of process parameters. The idea is to resize the transistor widths with minimal increase in area and power consumption while improving the confidence that the circuit meets the delay constraint under process variation. They developed a sizing tool using Lagrangian relaxation algorithm [57] for global optimization of transistor widths. The algorithm first estimates the expected delay variation at the primary output of a given circuit based on statistical static timing analysis. Using the delay distribution obtained at the primary output and the desired yield, the algorithm optimizes the area by increasing the size of transistors to achieve desired delay while reducing the transistor sizes in the off critical paths. Experimental results show as much as 19% average area saving compared to the worst case design using static timing analysis.

Sizing and dual V_{TH} [46]–[53]: Threshold voltage of the transistor is another parameter that can be adjusted to achieve a tradeoff between speed and leakage. A new

statistically aware dual-V_{TH} and sizing optimization has been suggested in [53] that considers both the variability in performance and leakage of a design. The statistical dual-V_{TH} and sizing problem is expressed as an assignment problem that seeks to find an optimal assignment of threshold voltages and drive strengths (from a set of drive strengths available in a standard cell library) for each of the gates in a given circuit network. The objective is to minimize the leakage power measured at a high-percentile point of its probability density function (pdf) while maintaining a timing constraint imposed on the circuit. The timing constraint is also expressed as a delay target for a high-percentile point of the circuit delay. These timing and power constraints can be determined based on desired yield estimates. For example, 90% point at the pdf of a delay can be specified as the delay target to meet 90% timing yield. It is a sensitivity-based optimization framework, in which the gates that are highly sensitive are identified to decide the appropriate threshold assignment. The authors report up to 50% leakage power saving with a tighter delay target by employing their approach.

Pipeline unbalancing [81], [82]: Shrinking pipeline depths in scaled technologies makes the path delay prone to within-die variations. By overdesigning the pipeline stages, better yield can be achieved at the cost of extra area and power. A framework to determine the yield of the pipeline under the impact of process variation has been proposed in [81]. This framework has been successfully employed to design high-yield pipeline while compromising the area/power overhead [82] by utilizing the concept of pipeline unbalancing. This technique advocates slowing down certain pipeline stages (by downsizing the gates) and accelerating the other stages (by upsizing) to achieve overall better pipeline yield under isoarea. For example, consider a three-stage pipeline design. Let us also assume that the combinational logic of each stage is optimized for minimum area for a specific target pipeline delay and yield. If the stage yield is y, then pipeline yield $= (y)^3$. Now if the pipeline is carefully optimized to achieve the pipeline stages yields to be y_0, y_1, and y_2 (under isoarea), one can improve yield if $(y_0 y_1 y_2) > (y)^3$. This can be elucidated by taking an example. Let us assume that the sizing of a three stage pipeline is done such that stage yield $y = 0.9$. Therefore, the pipeline yield $= (y)^3 = 72.9\%$. Now let us assume that the sizing of each stage is done carefully so that $y_0 = 0.98$, $y_1 = 0.95$, and $y_2 = 0.85$, resulting in pipeline yield $= (y_0 y_1 y_2) = 79.1\%$. It is obvious that better pipeline yield can be achieved by pipeline unbalancing (yield = 79.1%) rather than balanced pipeline (yield= 72.9%).

c) Resilient design

CRISTA [74], [118], [119]: CRISTA is a design paradigm for low-power, variation- and temperature-tolerant circuits and systems, which allows aggressive voltage overscaling at rated frequency. The CRISTA design principle [74] 1) isolates and predicts the paths that may become critical under process variations, 2) ensures (by design) that they are rarely activated, and 3) avoids possible delay failures in such long paths by adaptively stretching the clock period to two cycles. This allows the circuit to operate at reduced supply voltage while achieving the required yield with small throughput penalty (due to rare two-cycle operations). The concept of CRISTA is shown in Fig. 27(a) with an example of three pipelined instructions where the second instruction activates the critical path. CRISTA can be performed by gating the third clock pulse during the execution of the second instruction for correct functionality of the pipeline at scaled supply voltage. The regular clock and CRISTA-related clock gating is shown in Fig. 27(a) for the sake of clarity. The CRISTA design methodology is applied to random logic by hierarchical Shannon expansion [168] and gate sizing [Fig. 27(b)]. Multiple expansions reduce the activation probability of the paths. In the example shown in Fig. 27(b), critical paths are restricted within CF_{53} (by careful partitioning and gate sizing). The critical paths are activated only when $x_1!x_2x_3 = 1$ with activation probability of 12.5% assuming that each signal can be logic "1" 50% of the time. CRISTA allows aggressive supply voltage scaling to improve power consumption by ~40% with only 9% area and small throughput penalty for a two-stage pipelined arithmetic logic unit (ALU) [118] compared to the standard approach to designing circuits. Note that CRISTA can be applied to circuits as well as microarchitecture level [119].

Fig. 27(c) shows application of CRISTA for dynamic thermal management in a pipelined processor. Since execution (EX) unit is statistically found to be one of the hottest components, CRISTA is employed to allow voltage overscaling in the EX stage. The critical paths of EX stage are predicted by decoding the inputs using a set of predecoders. At nominal temperature, the predecoders are disabled, however, at the elevated temperature, the supply voltage of the execution unit is scaled down and predecoders are enabled. This ensures cooling down of the system and occasional two-cycle operations in the EX stage (at rated frequency) whenever the critical path is activated. If the temperature still keeps rising and crosses the emergency level, then conventional dynamic voltage frequency scaling (DVFS) is employed for throttling the temperature down. DVFS is often associated with stalling while the phase-locked loop (PLL) frequency is locked at the desired level. It is interesting to note that CRISTA can avoid triggering of DVFS for all SPEC2000 benchmark programs; saving throughput loss. This is evident from Fig. 27(d), which shows activation count of DVFS with and without CRISTA.

d) Run time techniques

Adaptive body bias [59]: As discussed before, threshold voltage of the transistor can be tuned carefully to speed up the design. However, lowering the V_{TH} also changes the on-current. It has been noted that transistor V_{TH} is a function of body to source voltage (V_{BS}). Hence

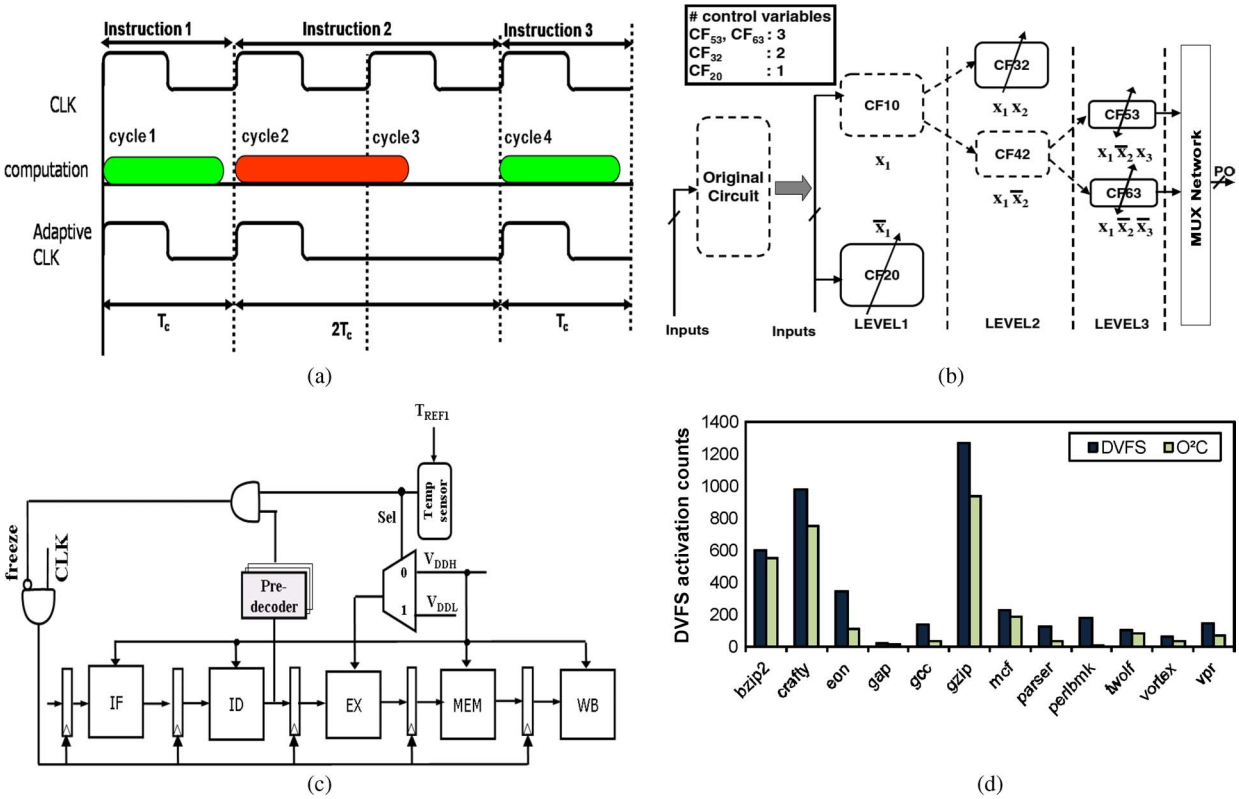

Fig. 27. *(a) Timing diagram of CRISTA paradigm. Long paths are activated rarely and they are evaluated in two cycles. (b) Shannon-expansion-based CRISTA design methodology for random logic. Multiple expansions reduce the activation probability of the paths. In this example, critical paths are restricted within CF_{53} (by careful partitioning and gate sizing) which is activated when $x_1!x_2x_3 = 1$ with activation probability of 12.5%. (c) CRISTA at microarchitectural level of abstraction for adaptive thermal management [74]. (d) Activation count of DVFS and CRISTA. CRISTA avoids application of DVFS saving valuable overhead in terms of throughput.*

body potential of the transistor can be modulated to achieve speed or to lower the leakage power. The FBB to PMOS transistors improves the performance due to lower V_{TH} while the RBB reduces leakage due to higher V_{TH}. In [59], the authors propose ABB technique to selective dies to improve the power and performance. The faster and leakier dies are RBB while slower dies are FBB. This results in tighter delay distribution as shown in Fig. 28(a).

Adaptive voltage scaling [59]: Circuit speed is a strong function of supply voltage. Although increasing the supply voltage speeds up the circuit, it also worsens the power consumption. However, careful tuning of supply voltage

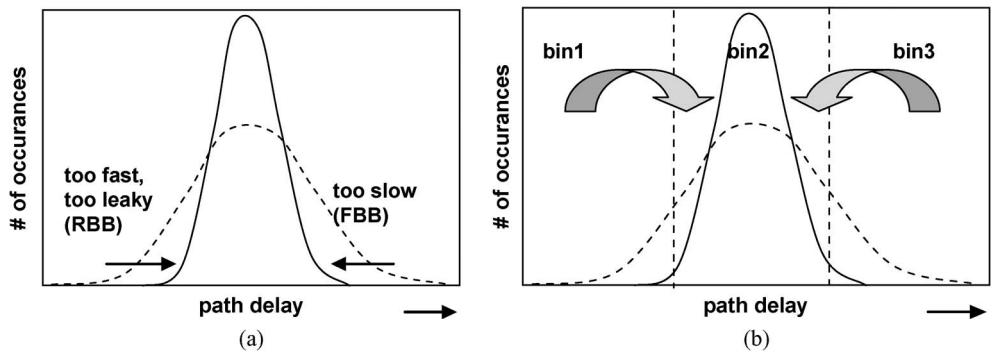

Fig. 28. *(a) Effect of adaptive body bias—slower paths are FBB whereas faster paths are RBB to squeeze the distribution. (b) Effect of adaptive voltage scaling—voltage boosted up (down) for slower (faster) dies. The chips in slower/discarded bins move to faster bins.*

can improve the frequency while staying within the power budget. For example, the slower dies already consume low power due to high V_{TH} transistors. Therefore, supply voltage of these dies can be boosted up to improve the frequency. Similarly, the supply voltage of faster and power hungry dies can be scaled down to save power dissipation while affecting the speed minimally. In [59], the authors propose adaptive supply voltage technique to improve frequency and meet power specification. As shown in Fig. 28(b), the slower dies from bin3 can be moved to nominal speed bin2 and faster dies from bin1 to bin2.

Sensor-based design [120], [154], [155]: Design time techniques are prone to errors due to operating process, voltage, and temperature (PVT) conditions. Therefore, on-chip sensors can be used to estimate the extent of variations and apply right amount of corrective actions to avoid any possible failures. A variation-resilient circuit design technique is presented in [120] for maintaining parametric yield under inherent variation in process parameters. They utilize on-chip PLL as a sensor to detect PVT variations or even temporal degradation stemming from NBTI. The authors show that control voltage (V_{cnt}) of voltage-controlled oscillator (VCO) in PLL can dynamically capture performance variations in a circuit. By utilizing the V_{cnt} signal of PLL, they propose a variation-resilient circuit design using adaptive body bias. V_{cnt} is used to generate an optimal body bias for various circuit blocks in order to avoid possible timing failures. Results show that even under extreme variations, reasonable parametric yield can be maintained while minimizing other design parameters such as area and power. Several similar sensor-based adaptive design techniques can be found in literature. For example, Blome *et al.* [154] present an on-chip wearout detection circuit whereas an adaptive multichip processor based on online NBTI and oxide breakdown detection sensors has been presented in [155]. Another example is [170], where the authors describe a process-compensating dynamic (PCD) circuit technique for register files. Unlike prior fixed-strength keeper techniques, the keeper strength is optimally programmed based on the respective die leakage. Fig. 29 shows the PCD scheme with a digitally programmable 3-bit keeper applied on an eight-way register file local bit line (LBL). Each of the three binary-weighted keepers with respective widths $W, 2W$, and $4W$ can be activated or deactivated by asserting appropriate globally routed signals $b[2:0]$. A desired effective keeper width can be chosen among $[0, W, 2W, \ldots, 7W]$. The programmable keeper improves robustness and delay variation spread by restoring robustness of worst case leakage dies and improving performance of low-leakage dies.

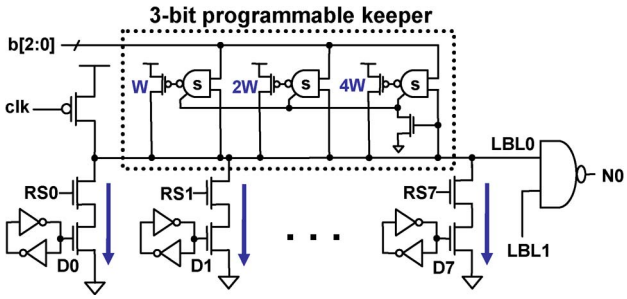

Fig. 29. ***Register file eight-way LBL with the PCD technique [170].***

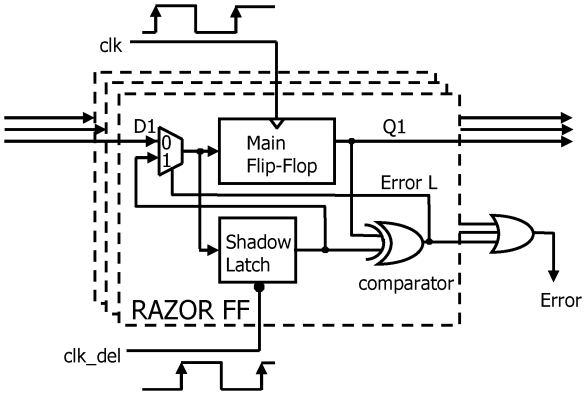

Fig. 30. ***RAZOR [64]–[68].***

2) Architectural Level Techniques for Resiliency

a) RAZOR [64]–[68]: In RAZOR [64]–[68], the authors propose a new approach to dynamic voltage scaling (DVS) based on dynamic detection and correction of circuit timing errors. The key idea of RAZOR is to tune the supply voltage by monitoring the error rate during circuit operation, thereby eliminating the need for voltage margins and exploiting the data dependence of circuit delay. A RAZOR flip-flop is introduced that double samples the pipeline stages, once with a fast clock and again with a time-borrowing delayed clock (Fig. 30). A meta-stability-tolerant comparator then validates the latched values sampled with the fast clock. If there is any occurrence of timing error, a modified pipeline misspeculation recovery mechanism restores the correct program state. The authors implemented the scheme right from the circuit level in order to achieve the best results. They reported up to 64.2% energy savings with only 3% performance penalty due to error recovery and 3.1% energy overhead. The micro-architecture level implementation shows that 8% of the flops are sufficient for conversion into RAZOR flops in order to achieve the desired tradeoff between error rate and supply voltage.

b) Adaptive latency microarchitectures [69]–[71], [97]: Variable latency processors help in tolerating the process variation-induced slower paths by switching the latency of various functional units to multiple clock cycles. In [69], authors describe a variable-latency register file (VL-RF) and a variable-latency floating-point unit (VL-FPU). The VL-RF helps to reduce the number of entries with long

access times in the register file. The ports are marked as fast or slow based on their access speed. The slower port is accessed in multiple clocks to avoid timing error. The VL-FPU helps to mitigate both random and systematic variations. An extra pipeline stage is inserted post-Si in order to implement increased latency for a particular slow pipeline stage. These techniques provide a large frequency benefit with a small instructions-per-cycle (IPC) penalty. Furthermore, the authors also observe that there is a large gap in the critical delay between SRAM-dominated register files and logic-dominated execution units. They illustrate the importance of averaging the delay between these two distinct structures and show that circuit techniques like time borrowing can be applied to close the gap. The authors report 23% mean frequency improvement with an average IPC loss of 3% for the 65-nm technology node.

Trifecta [97] is a similar architecture level variable latency technique that completes common-case subcritical path operations in a single cycle but uses two cycles when the critical (long) paths are exercised. Trifecta increases slack for both single- and two-cycle operations and offers a unique advantage under process variation. In contrast to improving power or performance at the cost of yield, Trifecta improves yield while preserving performance and power. The authors applied this technique to the critical pipeline stages of a superscalar out-of-order and a single issue in-order processor, namely, instruction issue and execute, respectively. The experiments show that the rare two-cycle operations result in a small decrease (5% for integer and 2% for floating point benchmarks of SPEC2000) in IPC. However, the increased delay slack causes an improvement in yield-adjusted throughput by 20% (12.7%) for an in-order (out-of-order) processor configuration.

c) Adaptive latency and voltage interpolation (ReVIVaL) [72], [73]: Combining variable latency and voltage interpolation (i.e., tuning the supply voltage) offers several benefits. First, variable latency can suffer from high IPC costs for certain bypass loops, and voltage interpolation may be a more efficient method for tuning. On the other hand, applying voltage interpolation individually to all units can lead to unnecessary power overheads if some units are slow and need voltage boost. Such power overheads can be eliminated by extending the latency of slow units. Furthermore, if variable latency generates a surplus of slack for certain loops, voltage interpolation can be applied to effectively reclaim that surplus for power savings, while still meeting the desired frequency target. Instead of providing one power supply voltage to all of the circuit blocks, the authors use VddH (higher voltage) and VddL (lower voltage). To best utilize these two voltages, the microarchitectural blocks are divided into multiple domains as shown in Fig. 31. For example, the combinational logic within a unit is divided into three voltage domains, where each domain can select between VddH (1.2 V) and VddL (1.0 V) individually via the power gating PMOS devices. The authors report 47% improvement in billion instructions per second per watt (BIPS/W) for a next-generation multiprocessor chip with 32 cores using voltage interpolation and adaptive latency compared to a global voltage scheme.

3) System Level Techniques

a) ANT [75]: ANT [75] is an energy-efficient solution for low-power broadband communication systems. The key idea behind ANT is to permit errors to occur in a signal processing block and then correct it via a separate EC block. An ANT-based DSP system is shown in Fig. 32. It has a main DSP (MDSP) block that computes in an energy-efficient manner but can make intermittent errors due to voltage overscaling. It accepts signal $x[n] + sn[n]$ as its input, where $x[n]$ is the input signal and $sn[n]$ is the input signal noise. The noisy output of the MDSP block is denoted by $y'[n]$.

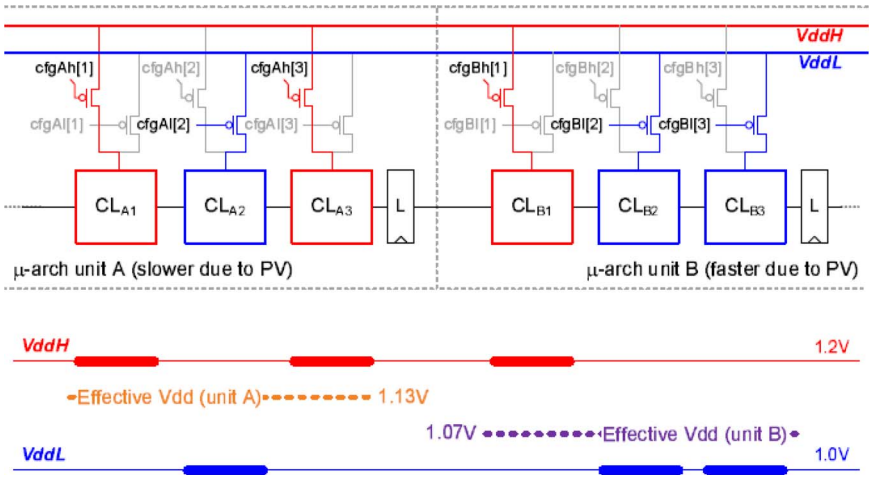

Fig. 31. ***ReVIVaL methodology [72], [73]. Voltage interpolation provides right amount of supply voltage to individual blocks for energy efficiency.***

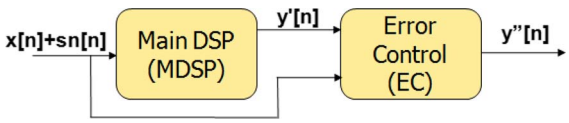

Fig. 32. ***Algorithmic noise tolerance (ANT) [75].***

In essence, the MDSP block sacrifices noise immunity for energy efficiency. The EC block observes the noisy output $y'[n]$, and the input $x[n] + sn[n]$ and certain internal signals of MDSP to detect and correct errors. The final corrected output of the ANT-based system is denoted as $y''[n]$.

The key to energy saving is the fact that the MDSP is operated at the overscaled supply voltage (V_{os}) whereas the EC block is operated at the critical supply voltage (V_{crit}). In this context, V_{crit} is the amount of supply voltage which is just enough for all critical paths of EC to meet the timing requirement. Furthermore, the EC block is designed to be much simpler/smaller than the MDSP block relaxing the constraints on delay and power significantly. Due to relaxed power/delay specifications, much higher noise immunity (or robustness) can be achieved in EC design. As the EC block is designed to be much smaller than the MDSP block, this extra power has minimal impact on the overall power consumption. The ANT system results in significant energy saving per clock as long as $V_{os} < V_{crit}$ and the switching capacitance of EC is reasonably small.

C. Process Tolerance by Adaptive Quality Modulation

So far we have discussed process variation resilience in random logic and memories where variation-related timing/parametric errors were tolerated by sizing/dual-V_{TH}/latency, etc. There are other spectra of designs (e.g., digital signal processing) that provide an extra knob to tolerate the process variations, namely, quality. The process-variation-induced timing errors in a DSP systems can be tolerated by exploiting the fact that not all intermediate computations are equally important to obtain "good" output quality. Therefore, it is possible to identify computational paths that are vital in maintaining high quality and develop an architecture that provides unequal error protection—more important computations (in terms of quality) to have shorter paths than less important ones. Quality, for example, can be defined in terms of signal-to-noise ratio (SNR) or mean squared error. Examples of such DSP systems/subsystems can range from simple and all pervasive digital filters to complex image, video, and speech processing systems.

This concept is clearly illustrated by taking an example of any DSP system that has eight outputs and each of them contributes towards the quality of the system. Under conventional design, the delays of all paths are optimized to be same (regardless of their contribution towards output quality) in order to minimize power, area, and delay.

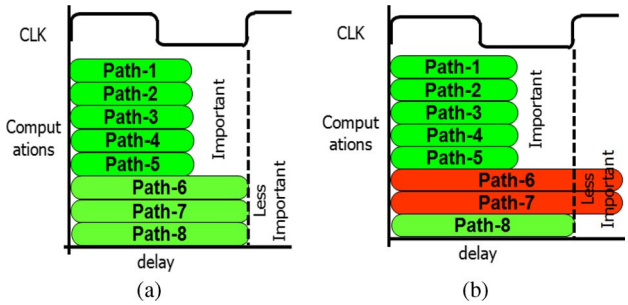

Fig. 33. ***(a) Path delays for graceful quality degradation [121]–[123]. (b) Longer but less important paths are being affected by process variation.***

However, for proper tradeoff between quality/power/robustness, the system can be designed with skewed path delays as shown in Fig. 33(a) [121]–[123]. The important computations are constrained to finish early with fewer constraints given to the less important ones. Utilization of this architecture enables tolerance to delay errors in longer (but less important) paths with minimal peak signal-to-noise ratio (PSNR) degradation [Fig. 33(b)]. Reconfiguration of the architecture can also be used to obtain tradeoffs between quality and power consumption. In the following paragraphs, we take an example of various DSP applications [namely, DCT, finite impulse response (FIR) filters, color interpolation] and demonstrate design strategy to enable proper tradeoff between power, quality, and process tolerance.

a) Discrete cosine transform (DCT) [121]: DCT operation transforms an image block from spatial domain to the frequency domain. DCT is important in the field of video/image compression due to its inherent capability of achieving high compression rates at low design complexity. It has been noted [121] that all coefficients of the 2-D DCT matrix do not affect the image quality in a similar manner. Analysis conducted on various images like Lena, peppers, etc. [121] show that most of the input image energy (around 85% or more) is contained in the first 20 coefficients of the DCT matrix after the 2D-DCT operation. In Fig. 34(a), the top left shaded 5×5 block in DCT matrix contains more than 75% of the image energy. The coefficients beyond that (the unshaded area) contribute significantly less in the improvement of image quality and hence, the PSNR. With this information in mind, Banerjee *et al.* [121] propose an architecture that computes the high-energy components of the final DCT matrix faster than the low-energy components [similar to as shown in Fig. 33(a)], at a cost of slightly increased area. Note that the not-so-important components are computed from the high-energy components (if possible), to improve area. Designing the architecture in such a manner 1) isolates the computational paths based on high-energy and low-energy contributing components, and 2) allows supply voltage scaling to trade off power

Fig. 34. ***(a) Energy distribution of 2-D DCT matrix (top 5 × 5 matrix is important). (b) In (ii) the conventional DCT fails but the scalable DCT produces good quality images as shown in (iii) and (iv).***

dissipation and image quality even under process parameter variations. Note that under supply voltage scaling, the only components that get affected are the ones computed using longer paths (or the less important ones that contribute less to image quality). In this context, it should also be noted that low-power design and error resiliency due to parameter variations are essentially the two sides of the same coin. If supply voltage is kept fixed at the nominal value, the only components that may get affected under parameter variations are the ones with longer delays (less important ones), leading to minor quality degradation. Results show that even under large process variation and supply voltage scaling (1 V down to 0.8 V), there is a gradual degradation of image quality (33 dB down to 23 dB) with considerable power savings (41%–62%) compared to existing implementations which fail to operate under such conditions. This is clearly evident from Lena images in Fig. 34(b) with conventional and scalable DCT design.

b) Color interpolation [122]: Let us consider color interpolation as another example where the quality knob can be used to improve error resiliency. Color interpolation is used extensively for image processing applications. Since each pixel of a color image consists of three primary color components, red (R), green (G), and blue (B), imaging systems require three image sensors in order to capture a scene. However, due to cost constraints, it is customary for such devices to capture an image with a single sensor and sample only one of the three primary colors at each pixel and store them in color filter arrays (CFAs) as shown in Fig. 35(a). In order to reconstruct a full color image, the missing color samples at each pixel need to be interpolated by the process of color interpolation. For developing variation-tolerant color interpolation architecture, the computations required for interpolation are divided into two parts based on their impact on the output image quality [122]. The first part consists of the "bilinear" component (absolutely necessary for interpolation), and the second part consists of a "correction" term (needed to improve image PSNR). By linear combination of the bilinear and correction terms, a high-quality interpolation of a missing color value at a pixel is possible. The correction term is designated as a "gradient" and is defined as a 2-D vector of an image intensity function with the components given by the derivatives in the horizontal and vertical directions at

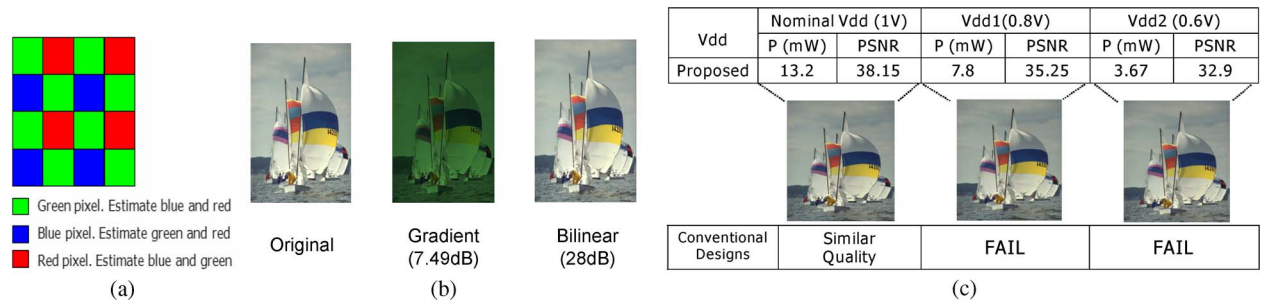

Fig. 35. ***(a) Basic concept of color interpolation. (b) Example showing the importance of bilinear and gradient components. (c) Output showing graceful quality degradation in voltage scalable and robust color interpolation architecture. The conventional architecture fails at 0.8 and 0.6 V of supply voltage.***

each image pixel. It can be observed from Fig. 35(b) (as well as from the PSNR values) that the bilinear component is important whereas the gradient component is less important for the image quality. The basic idea behind the voltage-scalable, variation-resilient architecture is to retain the bilinear part in all computations (by computing them fast) and vary the size and complexity of the gradient component to satisfy low power and error tolerance. In other words, the complexity of the gradient component can be reduced to consume less power and area (even if that implies increased delay or susceptibility towards process variation). Under scaled voltages and parameter discrepancies, the delays in all computation paths increase. To maintain reasonable image quality under such scenario, the values and the number of coefficients for evaluation of the gradient component of each filter are varied. The new filter coefficients may be suboptimal in Wiener criterion [122] (that prescribes an expression to minimize the difference between original and reconstructed filter coefficient); however, by performing a rigorous error analysis, the error imposed after each alteration of the coefficient values/numbers is minimized. Simulation results show that even at a scaled voltage (53% of nominal) and severe process variations the scalable design [122] provides reasonable image PSNR [as shown in Fig. 35(c)] and 72% power saving. The conventional design fails to provide the specified quality at scaled supply.

c) FIR Filter [123]: FIR filters are widely used in the DSP systems to discard the unwanted frequency components from the stream of sampled inputs. In FIR filters, some coefficients are more important than the others to determine the filter response. The principle for realizing the process of the adaptive filters is to perform the computations associated with the important coefficients with higher priority than the less important ones, so that in presence of delay variations only the less important coefficients are affected. For this purpose, Banerjee *et al.* [123] first identify the "important coefficients" by conducting a sensitivity analysis which determines how the outputs are affected by the various filter coefficients. First, the coefficients are individually set to zero and the filter response is recorded. The passband/stopband frequency ripple values are used as the metric for estimating the importance of the individual coefficients. In order to understand the cumulative effect of setting a set of filter coefficients to zero, the coefficients with smallest absolute magnitudes are set to zero and the filter response is recorded. Next, the procedure is repeated with increasing number of coefficients (with gradually increasing magnitudes) being assigned zero values. For example, first sets of two coefficients [e.g., $(c_0, c_1), (c_2, c_3)$, etc.] of small magnitudes are set to zero, then sets of three coefficients [e.g., $(c_0, c_1, c_2), (c_3, c_4, c_5)$, etc.] are set to zero and so on. Fig. 36(a) shows that with increasing numbers of coefficients having zero values, both the passband and stopband ripple magnitudes gradually increase and degrade the filter response. Fig. 36(b) shows the magnitude response of the original and altered filters with 6, 10, and 14 coefficients set to zero. As expected, the filter quality is minimally affected with six zero coefficients but gets gradually degraded with increasing number of zero-valued coefficients. In case of delay variations, if the coefficient outputs which have minimal impact on filter response are affected, then there will be a gradual degradation in filter quality. Under such conditions, Banerjee *et al.* [123] suggest setting the outputs of the affected coefficients to zero.

In order to illustrate this further, let us consider a transposed form FIR filter where the filter output is computed as

$$Y[n] = c_0 * x[n] + c_1 * x[n-1] + c_2 * x[n-2] + \ldots + c_{n-1} * x[1] + c_n * x[0] \quad (2)$$

where $c_0, c_1, \ldots, c_n$ denote the coefficients and $x[n] \ldots x[0]$ denote the inputs. Based on their magnitudes, the coefficients are divided into two sets: "important" and "less important." In order to ensure that these "important computations" are given higher priority, a level constrained common subexpression elimination (LCCSE) algorithm has been developed in [123]. LCCSE can constrain the number of adder levels required to compute each of the coefficient outputs. By specifying a tighter constraint (in terms of number of adders in the critical path) on the important coefficients, Banerjee *et al.* [123] ensure that they are computed ahead of the less important coefficient outputs (the less important ones are given relaxed timing constraints). This is further depicted in Fig. 36(c) that shows fast computation of important coefficients compared to the less important ones. In case of delay variations, due to voltage scaling (0.8 V) and/or process variations (30% delay spread), only the less important outputs are affected, resulting in graceful degradation of filter quality and 25%–30% power savings.

V. RELIABILITY MANAGEMENT TECHNIQUES

In the previous section, we discussed various pre-Si and post-Si adaptive techniques to overcome the impact of process-induced spatial variation. This section will summarize the recent techniques to tolerate reliability-induced temporal variability (especially NBTI) in logic and memories. Fig. 37 shows a top level picture of these techniques that will be described in the following paragraphs.

1) Techniques for Reliability Management in Memory

a) Periodic cell flipping [23]: One of the first reliability-aware design methods for memory was proposed by Kumar *et al.* [23], known as the cell-flipping technique. This method utilizes the fact that an unbalanced signal

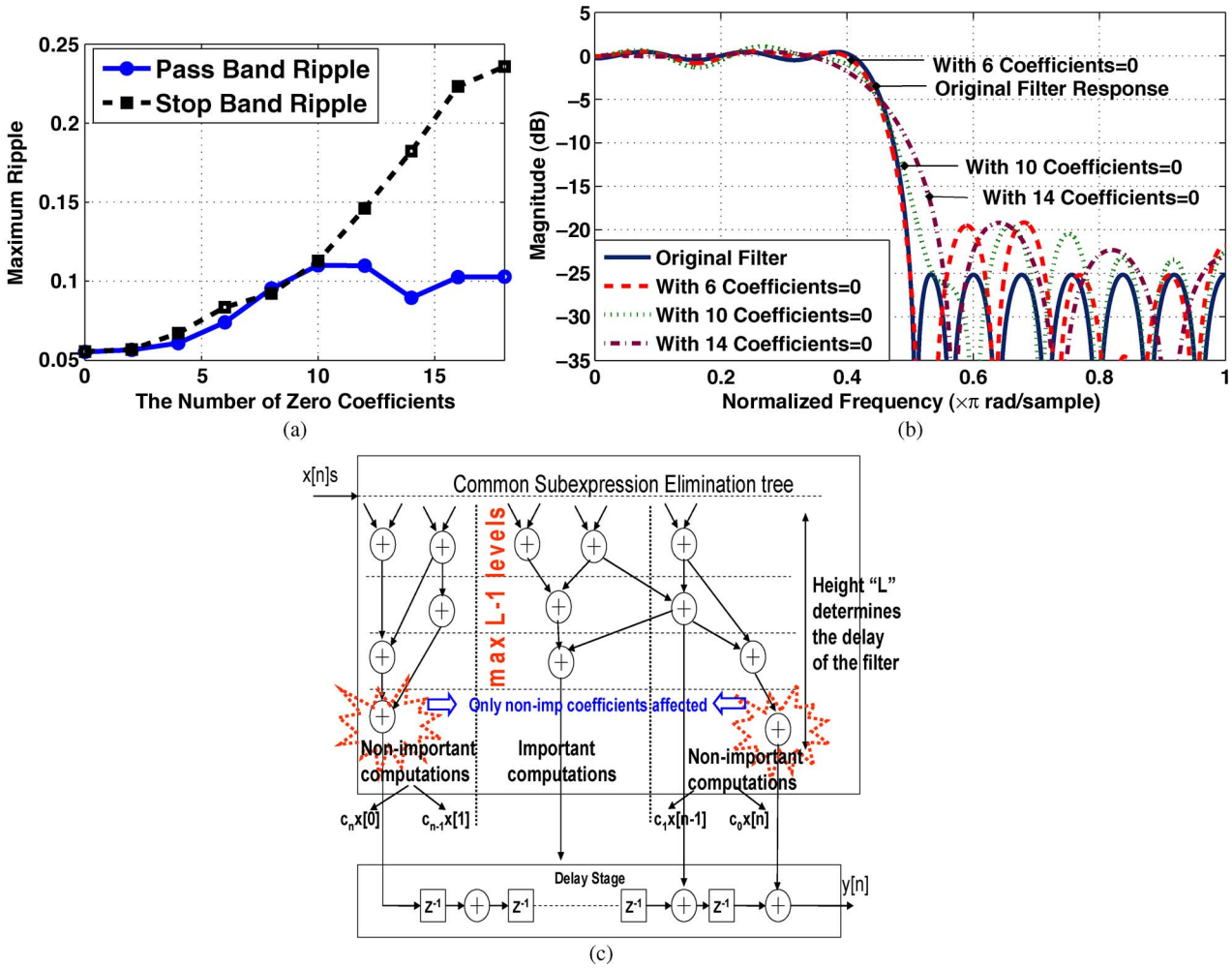

Fig. 36. *(a) Normalized passband/stopband ripple based with set of coefficients = 0 based on magnitude. The magnitude of ripple increases as the number of zeroed coefficients increases. (b) Filter response with 6, 10, and 14 coefficients = 0. (c) Voltage-scalable, process-tolerant FIR filter architecture [123]. The level constrained algorithm ensures that important coefficients have shorter path lengths (or height L that determines the delay of the filter).*

probability at a single bit cell can increase the failure probability. Hence, they proposed memory structures that periodically flip the cell state in order to balance the signal probability at both sides of the cell and to reduce the NBTI-induced cell failures.

b) Standby V_{DD} scaling [38], [126]: Memory cells are often put into a long period of standby mode (e.g., $L2/L3$ caches), where cell V_{DD} is reduced from its nominal value to minimize the leakage power consumption. Since NBTI degradation is highly dependent on the vertical oxide field, V_{DD} scaling can be also very effective in minimizing the impact of NBTI during the standby mode. Results show that as the activity factors get lower (i.e., more time being spent in the standby mode), V_{DD} scaling significantly improves cell stability under NBTI. One advantage of this

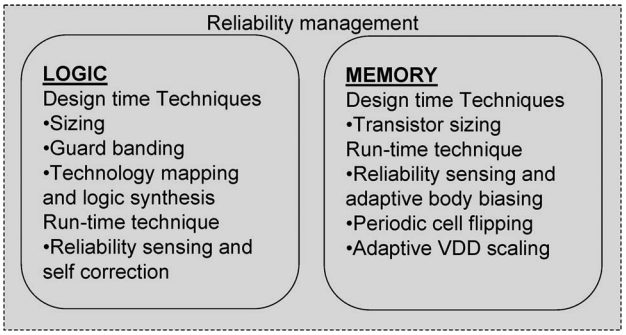

Fig. 37. *Overview of temporal variability management techniques in logic and memory.*

technique is that it can be easily incorporated to existing memory structures without additional overhead.

c) Reliability sensing and corrective action: On-chip reliability sensors can be used to detect reliability degradation in memory circuit. Based on the detected signals, one can apply corrective actions (e.g., ABB) to remove potential failures from the memory array. Contrary to the design time techniques, sensors can be used to apply the corrective measures only when required.

2) Techniques for Reliability Management in Logic

a) Gate/TR sizing [32], [34]: The well-known impact of NBTI is V_{TH} degradation that manifests itself as an increased circuit delay. One of the first approaches for reliability-aware design was based on an optimal gate sizing methodology [32], [34]. For example, the method proposed in [32] uses modified Lagrangian relaxation (LR) algorithm to compute optimal size of each gate under NBTI degradation. The basic idea of this approach is conceptually described in Fig. 38. As can be seen, the setup time margin of the design reduces with time due to NBTI, and after certain stress period (T_{NBTI}), the design may fail to meet the given timing constraint (D_{CONST}). To avoid such failures, the authors overdesign (transistor up-sizing considering signal probabilities) to ensure right functionality even after the required product lifetime T_{REQ}. The results from [32] reported an average area overhead of 8.7% for ISCAS benchmark circuits [169] to ensure three-year lifetime functionality at 70-nm node. An alternative method of transistor-level sizing was also proposed in [34]. In this approach, rather than sizing both the PMOS and the NMOS at the same time, the authors applied different sizing factor for each of them. This method could effectively reduce unnecessary slacks in NMOS network (which is not affected by NBTI) and lower the overall area overhead. The results from [32] reported that the average overhead reduced by nearly 40% compared to [34].

b) Technology mapping and logic synthesis [21], [22]: An alternative method is to consider NBTI at the technology mapping stage of the logic synthesis [21]. This approach is based on the fact that different standard cells have different NBTI sensitivity with respect to their input signal probabilities (probability that signal is logic "1"). With this knowledge, standard cell library is recharacterized with an additional signal probability dependency [22]. During logic synthesis, this new library is applied to properly consider the impact of NBTI degradation. An average of 10% reduction in area overhead compared to the worst case logic synthesis was reported using this method.

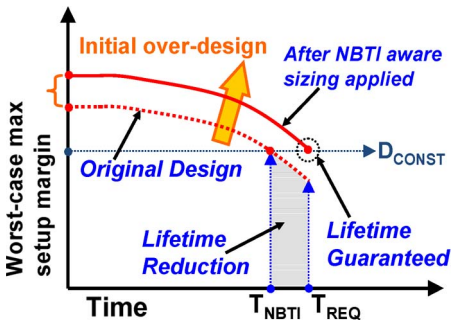

Fig. 38. *Transistor sizing for NBTI tolerance.*

c) Guard banding [38]: This is a very basic technique where the delay constraints are tightened with a fixed amount of delay guard banding during sizing. Guard band is selected as average delay degradations corresponding to the device lifetime. Though guard banding ignores the sensitivity of individual gates with respect to NBTI, delay degradation is weakly dependent on how the circuits were originally designed. Interestingly, it has been demonstrated in [38] that for a well-selected delay constraint, guard banding indeed produces results comparable to the pervious two approaches.

d) Self-correction using on-chip sensor circuits [29], [120], [124], [125]: In practice, guard-banding, sizing and the synthesis methods introduced above require an accurate estimation of NBTI-induced performance degradation during design phase. This estimation may produce errors due to unpredictable temperature, activity (signal probability), or process parameter variations. One way to handle these problems is to employ an active on-chip reliability sensor [29], [124], [125] and apply the right amount of timing slack to mitigate the timing degradation. Another approach proposed in [120] utilizes on-chip PLL to perform reliability sensing. In these approaches, the actual amount of NBTI degradation can be used for further corrective actions. For example, in [120], the detected signal is efficiently transformed into an optimal body-bias signal to avoid possible timing failures in the target circuit. However, it is also essential to consider the additional design overhead (e.g., increased area, power, interconnections) induced by body biasing and the sensor circuits. It should be further noted that self-correcting design techniques lets one design circuits using nominal or optimistic conditions (leading to lower power dissipation). Corrective actions, if required, are taken based on sensing NBTI/parameter degradations.

e) Architectural level techniques for adaptive reliability management [127]–[142]: Several techniques for effective reliability management have been proposed at microarchitectural level of abstraction. In [127], [129], and [130], the authors propose RAMP which is a microarchitectural model that dynamically tracks processor lifetime reliability, accounting for the behavior of the application that is being executed. Using RAMP, two microarchitectural techniques have been explored that can trade off processor lifetime reliability, cost, and performance. One set of techniques lets designers apply selective redundancy at the structural level and/or exploit existing microarchitectural

redundancy [131]. Another technique uses dynamic reliability management (DRM) [129]. In DRM, the processor uses runtime adaptation to respond to changing application behavior in order to maintain its lifetime reliability target. In contrast to methods in which reliability qualification is based on worst case behavior, DRM allows manufacturers qualify reliability at lower (but more likely) operating points than the worst case. This lowers the cost of reliable design. As in dynamic thermal management, if applications exceed the reliability design limit, the processor can adapt by throttling performance to maintain the system reliability target. Conversely, for applications that do not stress the reliability limit, DRM uses adaptation to increase performance while maintaining the target reliability.

Apart from above mentioned reliability degradation management, several other microarchitectural techniques have been proposed in [132]–[142] to allow the system to work in presence of transient and permanent faults. In Phoenix [132], the authors proposed the creation of an external circuitry fabricated from reliable devices for periodically surveying the design and reconfiguring faulty parts. In Diva [133], an online checker is inserted into the retirement stage of a microprocessor pipeline that fully validates all computation, communication, and control exercised in a complex microprocessor core. The approach unifies all forms of permanent and transient faults, making it capable of correcting design faults, transient errors (like those caused by natural radiation sources), and even untestable silicon defects. In [138], the authors present a self-repairing array structures (SRAS) hardware mechanism, for online repair of defected microprocessor array structures such as a reorder buffer and a branch history table. The proposed mechanism detects faults by employing dedicated "check rows." To achieve that, every time an entry is written to the array structure, the same data are also written into a check row. Subsequently, both locations are read and their values are compared which effectively detects any defected rows in the structure. In the proposed mechanism, when a faulty row is detected, it gets remapped by using a level of indirection. In [139], a fault-tolerant microprocessor design is presented, which exploits the existing redundancy in current microprocessors for providing higher reliability through dynamic hardware reconfiguration. A number of recent research efforts have utilized microarchitectural checkpointing techniques as a mechanism to recover from transient faults. The basic approach is to provide continuous computational checking, through redundant execution on idle resources [140] or dual-modular redundancy (DMR) [144]. Once a computation error is detected, the system is rolled back to the last state checkpoint, after which the system will retry the computation. Because of the sparseness of soft error rate (SER)-related transient faults, it is likely that the computation will complete successfully on the second attempt.

In [141]–[143], an ultralow-cost mechanism called Bulletproof pipeline has been proposed to protect a microprocessor pipeline and on-chip memory system from process- and reliability-induced defects. To achieve this goal, area-frugal online testing techniques and system-level checkpointing have been combined to ensure reliability found in traditional solutions, but at a lower cost. Bulletproof utilizes a microarchitectural checkpointing mechanism which creates coarse-grained epochs of execution, during which distributed online BIST mechanisms validate the integrity of the underlying hardware. In the case a failure is detected, Bulletproof relies on the natural redundancy of instruction level parallel processors to repair the system so that it can still operate in a degraded performance mode. Using detailed circuit-level and architectural simulation, the authors report 89% coverage of silicon defects with little area cost (5.8%). Fig. 39 illustrates the high-level system architecture of Bulletproof. It also shows a timeline of execution that demonstrates its operation. At the base of Bulletproof is a microarchitectural checkpoint and recovery mechanism that creates computational epochs. A computational epoch is a protected region of computation, typically at least thousands of cycles in length, during which the occurrence of any erroneous computation (that can be due to the use of defective devices) can be undone by rolling the computation back to the beginning of the computational epoch.

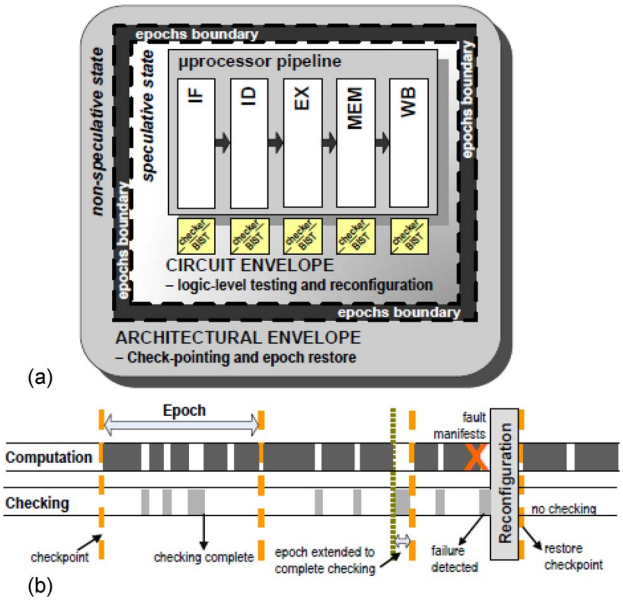

Fig. 39. ***Bulletproof architecture [143]. (a) Component-specific hardware testing blocks associated with each design component to implement test generation and checking mechanisms. When a failure occurs, it is possible that results computed in the microprocessor core are incorrect. However, speculative "epoch"-based execution guarantees that the computation can always be reversed to the last known-correct state. (b) Three possible epoch scenarios.***

During the computational epoch, online-distributed BIST style tests are performed in the background, checking the integrity of all system components. The corrective steps are taken if the BIST detects an error, otherwise the computational epoch is retired safely.

3) Voltage and Temperature Fluctuation Tolerance in Logic and Memories: In Section V-A and B, we described the circuit and microarchitecture level techniques to solve temporal reliability degradation. In this section, we address the solution of temporal variation of supply voltage and temperature. As noted before, voltage fluctuation results from a combination of higher switching activity of the underlying circuit and weak power grid. This type of variation can be tolerated by inserting large decoupling capacitors in the power grid. The uneven temperature distribution within the chip is the outcome of excessive power consumption by the circuit. The power dissipates as heat and if the package is unable to sink the heat generated by the circuit, then it is manifested as the elevated temperature. Since different parts of the chip experience different switching activity and power consumption, the temperature profile of the chip also varies accordingly over time. The temperature can be managed by reducing the power consumption of the die. For example, the operating frequency can be slowed down or the supply voltage can be scaled down. One can also throttle the heat by simultaneous control of voltage as well as frequency for cubic reduction in power consumption. Several other techniques have been proposed in the past like logic shutdown, clock gating, functional block duplication, and so on.

VI. VARIATIONS IN EMERGING TECHNOLOGIES

International Technology Roadmap for Semiconductors (ITRS) [145] projections show that bulk silicon is fast approaching the end of the technology roadmap due to fundamental physical barriers and manufacturing difficulties. To allow the unabated continuation of Moore's law, new devices and materials are being actively researched as possible replacement for bulk silicon. Popular among them are FinFets, nanowire, and nanotube-based devices [146]–[149]. These devices have different physical/chemical properties and show the promise of replacing silicon in the near future. However, it has been observed that process discrepancies will continue to affect the yield in such technologies as well. In this section, we briefly discuss some of the aspects of process variation effects on these novel devices.

Due to the inherent difference in their structures (FinFets, etc.) and chemical properties (e.g., carbon nanotubes) the physical parameters whose imprecision affect the electrical behavior of these devices might be significantly different from that of silicon. For instance, channel length (L) variation seems to be the predominant source of parameter discrepancy in bulk silicon technologies. On the other hand, it has been shown through practical measurement and theoretical formulation [146] that quantum effects have great impact on the performance of FinFet devices with gate lengths around 20 nm. Since the FinFet body thickness primarily determines these quantum effects, the device electrical behavior is extremely sensitive to small variations of body thickness. The effect dominates over the effects produced by other physical fluctuations like gate length and gate oxide thickness. Added to this, it has also been experimentally verified that the threshold voltage (V_{TH}) of such devices is highly sensitive to RDFs as well. In fact, it has been observed that the 3σ variation of V_{TH} can exceed 100% of its value by discrete impurity fluctuation. Such a random dopant effect can tremendously degrade the yield of differential circuits like SRAMs. Besides, different mechanical structure of FinFets introduces new sources of parameter disparities like nonrectangular fin cross section, concave sidewalls, and gate of source drain underlap which also affect the electrical characteristics of the device [147].

Similar is the case when we consider nanotubes/nanowire-based devices. Since the growth process of these devices is different from that of silicon, several new structural/manufacturing sources of parameter dissimilarities arise (like diameter of the tubes, chirality factor, and semiconducting/metallic tubes) to affect their electrical behavior. A recent study [148] on the effects of process inaccuracies on electrical behavior of nanotubes has shown that these devices are inherently more resilient to such effects compared to planar silicon devices. The authors claim that the effects of process variations are reduced by a factor of four compared to bulk silicon. For example, while a variation in the oxide thickness T_{OX} strongly affects the drive current and capacitance of bulk and FinFET devices due to planar geometry, it will have negligible impact on that of nanowire FET/carbon nanotube FET (NWFET/CNFET) devices due to cylindrical geometry. While this criterion seems to be provide an answer to several scaling issues, it should be noted that these studies were conducted under the assumption of a matured process which might be significantly difficult to obtain in the near future for this technology. Also, the overall impact is not only determined by the inherent resiliency of the devices but also the magnitude of parameter variations ($\pm 3\sigma$), which is increasing rapidly with shrinkage in transistor dimensions. Unlike nanotube-based transistors, the parameter discrepancies affect the reliability of nanotube-based interconnects to a more significant extent when compared to copper interconnects. It has been shown [149] that single-walled carbon nanotube (SWCNT) bundle interconnect will typically have larger overall 3σ variations in delay when compared to the copper interconnect. In order to achieve the same percentage variation in both SWCNT bundles and copper interconnect, the percentage variation in bundle dimensions must be reduced by up to 63% in 22-nm process technology.

Overall, we conclude that the negative effects of process inaccuracies and constantly changing device metrics (over time) would continue to haunt present/future technologies. The minor fluctuations and inaccuracies that used to be inconsequential can, in today's technology, add up and manifest as system failure. With the advancement of technology, it would be difficult to isolate the failures and yield bottlenecks to one particular problem at the circuit or device level. Therefore, addressing the issues only at any particular level of abstraction (namely, device, circuit, or architecture) may not be fruitful. Innovative and holistic system/circuit level methodologies would be needed to trade between power, area, frequency, robustness, and quality while maintaining adequate manufacturing yield.

VII. CONCLUSION

Parameter variations and reliability degradation are becoming important issues with scaling of device geometries. In this paper, we presented an overview of various sources of process variations as well as reliability degradation mechanisms. We demonstrated that variation-aware or error-aware design is essential to stay within the power/performance envelop while meeting the yield requirement. We presented solutions at different level of abstractions-circuits and architecture to address these issues in logic and memories. ■

Acknowledgment

The authors would like to thank N. Banerjee for extending help during the preparation of this manuscript.

REFERENCES

[1] A. Asenov, A. R. Brown, J. H. Davies, S. Kaya, and G. Slavcheva, "Simulation of intrinsic parameter fluctuations in decananometer and nanometer-scale MOSFETs," *IEEE Trans. Electron Devices*, vol. 50, no. 9, pp. 1837–1852, Sep. 2003.

[2] M. Hane, Y. Kawakami, H. Nakamura, T. Yamada, K. Kumagai, and Y. Watanabe, "A new comprehensive SRAM soft error simulation based on 3D device simulation incorporating neutron nuclear reactions," in *Proc. Simul. Semiconductor Processes Devices*, 2003, pp. 239–242.

[3] S. R. Nassif, "Modeling and analysis of manufacturing variations," in *Proc. Custom Integrated Circuit Conf.*, 2001, pp. 223–228.

[4] C. Visweswariah, "Death, taxes and failing chips," in *Proc. Design Autom. Conf.*, 2003, pp. 343–347.

[5] S. Borkar, T. Karnik, S. Narendra, J. Tschanz, A. Keshavarzi, and V. De, "Parameter variation and impact on circuits and microarchitecture," in *Proc. Design Autom. Conf.*, 2003, pp. 338–342.

[6] A. Bhavnagarwala, X. Tang, and J. D. Meindl, "The impact of intrinsic device fluctuations on CMOS SRAM cell stability," *IEEE J. Solid State Circuits*, vol. 36, no. 4, pp. 658–665, Apr. 2001.

[7] X. Tang, V. De, and J. D. Meindl, "Intrinsic MOSFET parameter fluctuations due to random dopant placement," *Trans. Very Large Scale Integr. (VLSI) Syst.*, vol. 5, no. 4, pp. 369–376, Dec. 1997.

[8] A. Raychowdhury, J. Kurtin, S. Borkar, V. De, K. Roy, and A. Keshavarzi, "Theory of multi-tube carbon nanotube transistors for high speed variation-tolerant circuits," in *Proc. Device Res. Conf.*, 2008, pp. 23–24.

[9] A. Nieuwoudt and Y. Massoud, "Assessing the implications of process variations on future carbon nanotube bundle interconnect solutions," in *Proc. Int. Symp. Quality Electron. Design*, 2007, pp. 119–126.

[10] N. Patil, J. Deng, H. S. P. Wong, and S. Mitra, "Automated design of misaligned-carbon-nanotube-immune circuits," in *Proc. Design Autom. Conf.*, 2007, pp. 958–961.

[11] J. Zhang, N. Patil, A. Hazeghi, and S. Mitra, "Carbon nanotube circuits in the presence of carbon nanotube density variations," in *Proc. Design Autom. Conf.*, 2009, pp. 71–76.

[12] S. Bobba, J. Zhang, A. Pullini, D. Atienza, and G. D. Micheli, "Design of compact imperfection-immune CNFET layouts for standard-cell-based logic synthesis," in *Proc. Design Autom. Test Eur.*, 2009, pp. 616–621.

[13] S. Borkar, A. Keshavarzi, J. K. Kurtin, and V. De, "Statistical circuit design with carbon nanotubes," U.S. Patent Appl. 20 070 155 065, 2005.

[14] S. H. Gunther, F. Binns, D. M. Carmean, and J. C. Hall, "Managing the impact of increasing microprocessor power consumption," *Intel Tech. J.*, pp. 1–9, 2001.

[15] B. E. Deal, M. Sklar, A. S. Grove, and E. H. Snow, "Characteristics of the surface-state charge (Qss) of thermally oxidized silicon," *J. Electrochem. Soc.*, vol. 114, pp. 266–273, 1967.

[16] E. H. Nicollian and J. R. Brews, *MOS Physics and Technology*. New York: Wiley-Interscience, 1982.

[17] C. E. Blat, E. H. Nicollian, and E. H. Poindexter, "Mechanism of negative bias temperature instability," *J. Appl. Phys.*, vol. 69, pp. 1712–1720, 1991.

[18] M. F. Li, G. Chen, C. Shen, X. P. Wang, H. Y. Yu, Y. Yeo, and D. L. Kwong, "Dynamic bias-temperature instability in ultrathin SiO2 and HfO2 metal-oxide semiconductor field effect transistors and its impact on device lifetime," *Jpn. J. Appl. Phys.*, vol. 43, pp. 7807–7814, Nov. 2004.

[19] S. Jafar, Y. H. Kim, V. Narayanan, C. Cabral, V. Paruchuri, B. Doris, J. Stathis, A. Callegari, and M. Chudzik, "A comparative study of NBTI and PBTI (charge trapping) in SiO2/HfO2 stacks with FUSI, TiN, Re gates," in *Proc. Very Large Scale Integr. (VLSI) Circuits*, 2006, pp. 23–25.

[20] F. Crupi, C. Pace, G. Cocorullo, G. Groeseneken, M. Aoulaiche, and M. Houssa, "Positive bias temperature instability in nMOSFETs with ultra-thin Hf-silicate gate dielectrics," *J. Microelectron. Eng.*, vol. 80, pp. 130–133, 2005.

[21] S. V. Kumar, C. H. Kim, and S. S. Sapatnekar, "NBTI-aware synthesis of digital circuits," in *Proc. Design Autom. Conf.*, 2007, pp. 370–375.

[22] S. V. Kumar, C. H. Kim, and S. S. Sapatnekar, "An analytical model for negative bias temperature instability," in *Proc. Int. Conf. Comput.-Aided Design*, 2006, pp. 493–496.

[23] S. V. Kumar, C. H. Kim, and S. S. Sapatnekar, "Impact of NBTI on SRAM read stability and design for reliability," in *Proc. Int. Symp. Quality Electron. Design*, 2006, pp. 210–218.

[24] S. V. Kumar, C. H. Kim, and S. S. Sapatnekar, "Adaptive techniques for overcoming performance degradation due to aging in digital circuits," in *Proc. Asia-South Pacific Design Autom. Conf.*, 2009, pp. 284–289.

[25] S. V. Kumar, C. Kashyap, and S. S. Sapatnekar, "A framework for block-based timing sensitivity analysis," in *Proc. Design Autom. Conf.*, 2008, pp. 688–693.

[26] S. V. Kumar, C. H. Kim, and S. Sapatnekar, "Mathematically-assisted adaptive body bias (ABB) for temperature compensation in gigascale LSI systems," in *Proc. Asia-South Pacific Design Autom. Conf.*, 2006, pp. 559–564.

[27] S. V. Kumar, C. H. Kim, and S. S. Sapatnekar, "Body bias voltage computations for process and temperature compensation," *IEEE Trans. Very Large Scale Integr. (VLSI) Syst.*, vol. 16, no. 3, pp. 249–262, Mar. 2008.

[28] S. Kumar, C. H. Kim, and S. Sapatnekar, "NBTI-aware synthesis of digital circuits," in *Proc. Design Autom. Conf.*, 2007, pp. 370–375.

[29] E. Karl, P. Singh, D. Blaauw, and D. Sylvester, "Compact in-situ sensors for monitoring negative-bias-temperature-instability effect and oxide degradation," in *Proc. Int. Solid-State Circuits Conf.*, 2008, pp. 410–623.

[30] W. Wang, V. Reddy, A. T. Krishnan, S. Krishnan, and Y. Cao, "An integrated modeling paradigm of circuit reliability for 65 nm CMOS technology," in *Proc. Custom Integr. Circuits Conf.*, 2007, pp. 511–514.

[31] W. Wang, Z. Wei, S. Yang, and Y. Cao, "An efficient method to identify critical gates under circuit aging," in *Proc. Int. Conf. Comput.-Aided Design*, 2007, pp. 735–740.

[32] K. Kang, H. Kufluoglu, M. A. Alam, and K. Roy, "Efficient transistor-level sizing technique under temporal performance degradation due to NBTI," in *Proc. Int. Conf. Comput. Design*, 2006, pp. 216–221.

[33] H. Kufluoglu, "MOSFET degradation due to negative bias temperature instability (NBTI) and hot carrier injection (HCI) and its implications for reliability-aware VLSI design," Ph.D. dissertation, Dept. Electr. Comput. Eng., Purdue Univ., West Lafayette, IN, 2007.

[34] B. C. Paul, K. Kang, H. Kuflouglu, M. A. Alam, and K. Roy, "Temporal performance degradation under NBTI: Estimation and design for improved reliability of nanoscale circuits," in *Proc. Design Autom. Test Eur.*, 2006, pp. 780–785.

[35] B. C. Paul, K. Kang, H. Kufluoglu, M. A. Alam, and K. Roy, "Impact of NBTI on the temporal performance degradation of digital circuits," *IEEE Electron Device Lett.*, vol. 26, no. 8, pp. 560–562, Aug. 2005.

[36] K. Kang, M. A. Alam, and K. Roy, "Characterization of NBTI induced temporal performance degradation in nano-scale SRAM array using IDDQ," in *Proc. Int. Test Conf.*, 2007, pp. 1–10.

[37] K. Kang, S. P. Park, K. Roy, and M. A. Alam, "Estimation of statistical variation in temporal NBTI degradation and its impact in lifetime circuit performance," in *Proc. Int. Conf. Comput.-Aided Design*, 2007, pp. 730–734.

[38] K. Kang, S. Gangwal, S. P. Park, and K. Roy, "NBTI induced performance degradation in logic and memory circuits: How effectively can we approach a reliability solution?" in *Proc. Asia South Pacific Design Autom. Conf.*, 2008, pp. 726–731.

[39] T. H. Ning, P. W. Cook, R. H. Dennard, C. M. Osburn, S. E. Schuster, and H. Yu, "1 μm MOSFET VLSI technology: Part IV-hot electron design constraints," *Trans. Electron Devices*, vol. 26, no. 4, pp. 346–353, Apr. 1979.

[40] A. Abramo, C. Fiegna, and F. Venturi, "Hot carrier effects in short MOSFETs at low applied voltages," in *Proc. Int. Electron Device Meeting*, 1995, pp. 301–304.

[41] Y. Taur and T. H. Ning, *Fundamentals of Modern VLSI Devices*. New York: Cambridge Univ. Press, 1998.

[42] JEDEC Solid State Technology Association, "Failure mechanisms and models for semiconductor devices," JEP122-A, 2002.

[43] M. T. Quddus, T. A. DeMassa, and J. J. Sanchez, "Unified model for Q(BD) prediction for thin gate oxide MOS devices with constant voltage and current stress," *Microelectron. Eng. 2000*, vol. 51–52, pp. 357–372, May 2000.

[44] M. A. Alam, B. Weir, and A. Silverman, "A future of function or failure," *IEEE Circuits Devices Mag.*, vol. 18, no. 2, pp. 42–48, Mar. 2002.

[45] D. Young and A. Christou, "Failure mechanism models for electromigration," *IEEE Trans. Rel.*, vol. 43, no. 2, pp. 186–192, Jun. 1994.

[46] S. Sirichotiyakul, T. Edwards, C. Oh, R. Panda, and D. Blaauw, "Duet: An accurate leakage estimation and optimization tool for dual-Vt circuits," *IEEE Trans. Very Large Scale Integr. (VLSI) Syst.*, vol. 10, no. 2, pp. 79–90, Apr. 2002.

[47] P. Pant, R. Roy, and A. Chatterjee, "Dual-threshold voltage assignment with transistor sizing for low power CMOS circuits," *IEEE Trans. Very Large Scale Integr. (VLSI) Syst.*, vol. 9, no. 2, pp. 390–394, Apr. 2001.

[48] L. Wei, Z. Chen, M. Johnson, K. Roy, and V. De, "Design and optimization of low voltage high performance dual threshold CMOS circuits," in *Proc. Design Autom. Conf.*, 1998, pp. 489–494.

[49] T. Karnik, Y. Ye, J. Tschanz, L. Wei, S. Burns, V. Govindarajulu, V. De, and S. Borkar, "Total power optimization by simultaneous dual-Vt allocation and device sizing in high performance microprocessors," in *Proc. Design Autom. Conf.*, 2002, pp. 486–491.

[50] D. Nguyen, A. Davare, M. Orshansky, D. Chinnery, O. Thompson, and K. Keutzer, "Minimization of dynamic and static power through joint assignment of threshold voltages and sizing optimization," in *Proc. Int. Symp. Low-Power Electron. Design*, 2003, pp. 158–163.

[51] A. Srivastava, "Simultaneous Vt selection and assignment for leakage optimization," in *Proc. Int. Symp. Low-Power Electron. Design*, 2003, pp. 146–151.

[52] V. Sundarajan and K. Parhi, "Low power synthesis of dual threshold voltage CMOS VLSI circuits," in *Proc. Int. Symp. Low-Power Electron. Design*, 1999, pp. 139–144.

[53] A. Srivastava, D. Sylvester, D. Blauuw, and A. Agarwal, "Statistical optimization of leakage power considering process variations using dual-VTH and sizing," in *Proc. Design Autom. Conf.*, 2004, pp. 773–778.

[54] M. Ketkar and K. Kasamsetty, "Convex delay models for transistor sizing," in *Proc. Design Autom. Conf.*, 2000, pp. 655–660.

[55] J. Singh, V. Nookala, Z.-Q. Luo, and S. Sapatnekar, "Robust gate sizing by geometric programming," in *Proc. Design Autom. Conf.*, 2005, pp. 315–320.

[56] S. H. Choi, B. C. Paul, and K. Roy, "Novel sizing algorithm for yield improvement under process variation in nanometer," in *Proc. Design Autom. Conf.*, 2004, pp. 454–459.

[57] C.-P. Chen, C. C. N. Chu, and D. F. Wong, "Fast and exact simultaneous gate and wire sizing by Lagrangian relaxation," *IEEE Trans. Comput.-Aided Design Integr. Circuits Syst.*, vol. 18, no. 7, pp. 1014–1025, Jul. 1999.

[58] X. Bai, C. Visweswariah, P. N. Strenski, and D. J. Hathaway, "Uncertainty-aware circuit optimization," in *Proc. Design Autom. Conf.*, 2002, pp. 58–63.

[59] S. Borkar, T. Karnik, and V. De, "Design and reliability challenges in nanometer technologies," in *Proc. Design Autom. Conf.*, 2004, p. 75.

[60] C. Zhuo, D. Blaauw, and D. Sylvester, "Variation-aware gate sizing and clustering for post-silicon optimized circuits," in *Proc. Int. Symp. Low Power Electron. Design*, 2008, pp. 105–110.

[61] S. Kulkarni, D. Sylvester, and D. Blaauw, "A statistical framework for post-silicon tuning through body bias clustering," in *Proc. Int. Conf. Comput.-Aided Design*, 2006, pp. 39–46.

[62] M. Mani, A. Singh, and M. Orshansky, "Joint design-time and post-silicon minimization of parametric yield loss using adjustable robust optimization," in *Proc. Int. Conf. Comput.-Aided Design*, 2006, pp. 19–26.

[63] V. Khandelwal and A. Srivastava, "Variability-driven formulation for simultaneous gate sizing and post-silicon tunability allocation," in *Proc. Int. Symp. Phys. Design*, 2006, pp. 17–25.

[64] D. Ernst, N. S. Kim, S. Das, S. Pant, T. Pham, R. Rao, C. Ziesler, D. Blaauw, T. Austin, and T. Mudge, "RAZOR: A low-power pipeline based on circuit-level timing speculation," in *Proc. Int. Symp. Microarchitecture*, 2003, pp. 7–18.

[65] K. A. Bowman, J. W. Tschanz, N. S. Kim, J. C. Lee, C. B. Wilkerson, S. L. Lu, T. Karnik, and V. K. De, "Energy-efficient and metastability-immune timing-error detection and instruction-replay-based recovery circuits for dynamic-variation tolerance," in *Proc. Int. Solid-State Circuits Conf.*, 2008, pp. 402–623.

[66] D. Blaauw, S. Kalaiselvan, K. Lai, W. H. Ma, S. Pant, C. Tokunaga, S. Das, and D. Bull, "RAZOR-II: In-situ error detection and correction for PVT and SER tolerance," in *Proc. Int. Solid-State Circuits Conf.*, 2008, pp. 400–401.

[67] T. Austin, D. Blaauw, T. Mudge, and K. Flautner, "Making typical silicon matter with RAZOR," *IEEE Comput.*, vol. 37, no. 3, pp. 57–65, Mar. 2004.

[68] D. Ernst, S. Das, S. Lee, D. Blaauw, T. Austin, T. Mudge, N. S. Kim, and K. Flautner, "RAZOR: Circuit-level correction of timing errors for low-power operation," *IEEE Micro*, vol. 24, no. 6, pp. 10–20, Nov./Dec. 2004.

[69] X. Liang, G. Wei, and D. Brooks, "Process variation tolerant 3T1D based cache architectures," in *Proc. Int. Symp. Microarchitecture*, 2007, pp. 15–26.

[70] X. Liang and D. Brooks, "Mitigating the impact of process variations on processor register files and execution units," in *Proc. Int. Symp. Microarchitecture*, 2006, pp. 504–514.

[71] A. Tiwari, S. R. Sarangi, and J. Torrellas, "Recycle: Pipeline adaptation to tolerate process variation," in *Proc. Int. Symp. Comput. Architecture*, 2007, pp. 323–334.

[72] X. Liang, G.-Y. Wei, and D. Brooks, "ReVIVaL: A variation tolerant architecture using voltage interpolation and variable latency," in *Proc. Int. Symp. Comput. Architecture*, 2008, pp. 191–202.

[73] X. Liang, D. Brooks, and G.-Y. Wei, "A process-variation-tolerant floating-point unit with voltage interpolation and variable latency," in *Proc. Int. Solid-State Circuits Conf.*, 2008, pp. 404–405.

[74] S. Ghosh, S. Bhunia, and K. Roy, "CRISTA: A new paradigm for low-power and robust circuit synthesis under parameter variations using critical path isolation," *IEEE Trans. Comput.-Aided Design Integr. Circuits Syst.*, vol. 26, no. 11, pp. 1947–1956, Nov. 2007.

[75] N. R. Shanbhag, "Reliable and energy-efficient digital signal processing," in *Proc. Design Autom. Conf.*, 2002, pp. 830–835.

[76] P. Gupta and A. Kahng, "Manufacturing aware physical design," in *Proc. Int. Conf. Comput.-Aided Design Tutorial*, 2003, pp. 681–686.

[77] C. Kenyon, A. Kornfeld, K. Kuhn, M. Liu, A. Maheshwari, W. Shih, S. Sivakumar, G. Taylor, P. VanDerVoorn, and K. Zawadzki, "Managing process variation in Intel's 45 nm CMOS technology," *Intel Tech. J.*, vol. 12, no. 2, pp. 93–110, 2008.

[78] K. Kuhn, "Moore's law past 32 nm: Future challenges in device scaling," in *Proc. Int. Workshop Comput. Electron.*, Beijing, China, 2009.

[79] D. Boning and S. Nassif, "Models of process variations in device and interconnect," in *Design of High Performance Microprocessor Circuits*. New York: Wiley, 2001, pp. 98–115.

[80] D. Blaauw, K. Chopra, A. Srivastava, and L. Scheffer, "Statistical timing analysis: From basic principles to state of the art," *IEEE Trans. Comput.-Aided Design Integr. Circuits Syst.*, vol. 27, no. 4, pp. 589–607, Apr. 2008.

[81] A. Datta, S. Bhunia, S. Mukhopadhyay, N. Banerjee, and K. Roy, "Statistical

modeling of pipeline delay and design of pipeline under process variation to enhance yield in sub-100 nm technologies," in *Proc. Design Autom. Test Eur.*, 2005, pp. 926–931.

[82] A. Datta, S. Bhunia, S. Mukhopadhyay, and K. Roy, "A statistical approach to area-constrained yield enhancement for pipelined circuits under parameter variations," in *Proc. Asian Test Symp.*, 2005, pp. 170–175.

[83] R. Rao, A. Srivastava, D. Blaauw, and D. Sylvester, "Statistical analysis of subthreshold leakage current for VLSI circuits," *Trans. Very Large Scale Integr. (VLSI) Syst.*, vol. 12, no. 2, pp. 131–139, Feb. 2004.

[84] S. Zhang, V. Wason, and K. Banerjee, "A probabilistic framework to estimate xfull-chip subthreshold leakage power distribution considering within-die and die-to-die P-T-V variations," in *Proc. Int. Symp. Low Power Electron. Design*, 2004, pp. 156–161.

[85] R. Rao, A. Devgan, D. Blaauw, and D. Sylvester, "Parametric yield estimation considering leakage variability," in *Proc. Design Autom. Conf.*, 2004, pp. 442–447.

[86] A. Agrawal, K. Kang, and K. Roy, "Accurate estimation and modeling of total chip leakage considering inter- & intra-die process variations," in *Proc. Int. Conf. Comput.-Aided Design*, 2005, pp. 736–741.

[87] T.-Y. Wang and C. C.-P. Chen, "3-D thermal-ADI: A linear-time chip level transient thermal simulator," *IEEE Trans. Comput.-Aided Design Integr. Circuits Syst.*, vol. 21, no. 12, pp. 1434–1445, Dec. 2002.

[88] H. Su, F. Liu, A. Devgan, E. Acar, and S. Nassif, "Full chip estimation considering power, supply and temperature variations," in *Proc. Int. Symp. Low Power Electron. Design*, Aug. 2003, pp. 78–83.

[89] P. Li, L. Pileggi, M. Asheghi, and R. Chandra, "Efficient full-chip thermal modeling and analysis," in *Proc. Int. Conf. Comput.-Aided Design*, 2004, pp. 319–326.

[90] Y. Cheng, P. Raha, C. Teng, E. Rosenbaum, and S. Kang, "ILLIADS-T: An electrothermal timing simulator for temperature-sensitive reliability diagnosis of CMOS VLSI chips," *IEEE Trans. Comput.-Aided Des. Integr. Circuits Syst.*, vol. 17, no. 8, pp. 668–681, Aug. 1998.

[91] W. Huang, M. R. Stan, K. Skadron, K. Sankaranarayanan, and S. Ghosh, "HotSpot: A compact thermal modeling methodology for early-stage VLSI design," *IEEE Trans. Very Large Scale Integr. (VLSI) Syst.*, vol. 14, no. 5, pp. 501–513, May 2006.

[92] *BPTM 70 nm: Berkeley Predictive Technology Model*. [Online]. Available: ptm.asu.edu

[93] K. Kang, B. C. Paul, and K. Roy, "Statistical timing analysis using levelized covariance propagation considering systematic and random variations of process parameters," *ACM Trans. Design Autom. Electron. Syst.*, pp. 848–879, 2006.

[94] S. Mukhopadhyay, K. Kim, H. Mahmoodi, A. Datta, D. Park, and K. Roy, "Self-repairing SRAM for reducing parametric failures in nanoscaled memory," in *Proc. Very Large Scale Integr. (VLSI) Circuits*, 2006, pp. 132–133.

[95] S. Mukhopadhyay, H. Mahmoodi, and K. Roy, "Modeling of failure probability and statistical design of SRAM array for yield enhancement in nanoscaled CMOS," *IEEE Trans. Comput.-Aided Design Integr. Circuits Syst.*, vol. 24, no. 12, pp. 1859–1880, Dec. 2005.

[96] E. Seevinck, F. J. List, and J. Lohstroh, "Static-noise margin analysis of MOS SRAM cells," *IEEE J. Solid State Circuits*, vol. 22, no. 5, pp. 748–754, Oct. 1987.

[97] P. Ndai, N. Rafique, M. Thottethodi, S. Ghosh, S. Bhunia, and K. Roy, "Trifecta: A nonspeculative scheme to exploit common, data-dependent subcritical paths," *Trans. Very Large Scale Integr. (VLSI) Syst.*, vol. 18, no. 1, pp. 53–65, Jan. 2010.

[98] S. Mukhopadhyay, K. Kang, H. Mahmoodi, and K. Roy, "Reliable and self-repairing SRAM in nano-scale technologies using leakage and delay monitoring," in *Proc. Int. Test Conf.*, 2005, pp. 1–10.

[99] S. Ghosh, S. Mukhopadhyay, K. Kim, and K. Roy, "Self-calibration technique for reduction of hold failures in low-power nano-scaled SRAM," in *Proc. Design Autom. Conf.*, 2006, pp. 971–976.

[100] L. Chang, D. M. Fried, J. Hergenrother, J. W. Sleight, R. H. Dennard, R. K. Montoye, L. Sekaric, S. J. McNab, A. W. Topol, A. D. Adams, K. W. Guarini, and W. Haensch, "Stable SRAM cell design for the 32 nm node and beyond," in *Proc. Very Large Scale Integr. (VLSI) Technol.*, 2005, pp. 128–129.

[101] B. H. Calhoun and A. Chandrakasan, "A 256-kb 65-nm sub-threshold SRAM design for ultra-low-voltage operation," *IEEE J. Solid State Circuits*, vol. 42, no. 3, pp. 680–688, Mar. 2007.

[102] I. Chang, J. J. Kim, S. P. Park, and K. Roy, "A 32 kb 10 T Sub-threshold SRAM array with bit-interleaving and differential read scheme in 90 nm CMOS," *IEEE J. Solid State Circuits*, vol. 44, no. 2, pp. 650–658, Feb. 2008.

[103] J. P. Kulkarni, K. Kim, S. Park, and K. Roy, "Process variation tolerant SRAM design for ultra low voltage application," in *Proc. Design Autom. Conf.*, 2008, pp. 108–113.

[104] J. P. Kulkarni, K. Kim, and K. Roy, "A 160 mV robust Schmitt trigger based subthreshold SRAM," *IEEE J. Solid State Circuits*, vol. 42, no. 10, pp. 2303–2313, Oct. 2007.

[105] A. Agarwal, B. C. Paul, H. Mahmoodi, A. Datta, and K. Roy, "A process-tolerant cache architecture for improved yield in nano-scale technologies," *Trans. Very Large Scale Integr. (VLSI) Syst.*, pp. 27–38, 2005.

[106] A. J. Bhavnagarwala, A. Kapoor, and J. D. Meindl, "Dynamic-threshold CMOS SRAMs for fast, portable applications," in *Proc. ASIC/Syst. Chip Conf.*, 2000, p. 359.

[107] K. Zhang, U. Bhattacharya, Z. Chen, F. Hamzaoglu, D. Murray, N. Vallepalli, Y. Wang, B. Zheng, and M. Bohr, "A 3 GHz 70 Mb SRAM in 65 nm CMOS technology with integrated column-based dynamic power suppl," *IEEE J. Solid-State Circuits*, vol. 41, no. 1, pp. 146–151, Jan. 2006.

[108] Y. Wang, H. Ahn, U. Bhattacharya, T. Coan, F. Hamzaoglu, W. Hafez, C.-H. Jan, P. Kolar, S. Kulkarni, J. Lin, Y. Ng, I. Post, L. Wei, Y. Zhang, K. Zhang, and M. Bohr, "A 1.1 GHz 12 uA/Mb-leakage SRAM design in 65 nm ultra-low-power CMOS with integrated leakage reduction for mobile applications," in *Proc. Int. Solid-State Circuits Conf.*, 2007, pp. 324–325.

[109] J. Chang, M. Huang, J. Shoemaker, J. Benoit, S.-L. Chen, W. Chen, S. Chiu, R. Ganesan, G. Leong, V. Lukka, S. Rusu, and D. Srivastava, "The 65 nm 16 MB on-die L3 cache for a dual core multi-threaded Xeon processor," in *Proc. Symp. Very Large Scale Integr. (VLSI) Circuits*, 2006, pp. 126–127.

[110] K. Nii, M. Yabuuchi, Y. Tsukamoto, S. Ohbayashi, S. Imaoka, H. Makino, Y. Yamagami, S. Ishikura, T. Terano, T. Oashi, K. Hashimoto, A. Sebe, G. Okazaki, K. Satomi, H. Akamatsu, and H. Shinohara, "A 45-nm bulk CMOS embedded SRAM with improved immunity against process and temperature variations," *IEEE J. Solid-State Circuits*, vol. 43, no. 1, pp. 180–191, Jan. 2008.

[111] H. Pilo, J. Barwin, G. Braceras, C. Browning, S. Burns, J. Gabric, S. Lamphier, M. Miller, A. Roberts, and F. Towler, "An SRAM design in 65 nm and 45 nm technology nodes featuring read and write-assist circuits to expand operating voltage," in *Proc. Symp. Very Large Scale Integr. (VLSI) Circuits*, Jun. 2006, pp. 15–16.

[112] A. Bhavnagarwala, S. Kosonocky, C. Radens, K. Stawiasz, R. Mann, Q. Ye, and K. Chin, "Fluctuation limits and scaling opportunities for CMOS SRAM cells," in *Proc. IEDM Tech. Dig.*, 2005, pp. 659–662.

[113] M. Khellah, Y. Ye, N. S. Kim, D. Somasekhar, G. Pandya, A. Farhang, K. Zhang, C. Webb, and V. De, "Wordline & bit-line pulsing schemes for improving SRAM cell stability in low-vcc 65 nm CMOS designs," in *Proc. Symp. Very Large Scale Integr. (VLSI) Circuits*, 2006, pp. 12–13.

[114] K. Zhang, U. Bhattacharya, Z. Chen, F. Hamzaoglu, D. Murray, N. Vallepalli, Y. Want, B. Zheng, and M. Bohr, "SRAM design in 65-nm CMOS technology with dynamic sleep transistor for leakage reduction," *IEEE J. Solid-State Circuits*, vol. 40, no. 4, pp. 895–901, Apr. 2005.

[115] T. Kim, J. Liu, J. Keane, and C. H. Kim, "A 0.2 V, 480 kb subthreshold SRAM with 1 k cells per bitline for ultra-low-voltage computing," *IEEE J. Solid State Circuits*, vol. 43, no. 2, pp. 518–529, Feb. 2008.

[116] D. A. Patterson, P. Garrison, M. Hill, D. Lioupis, C. Nyberg, T. Sippel, and K. Van Dyke, "Architecture of a VLSI instruction cache for a RISC," in *Proc. Int. Symp. Comput. Architecture*, 2003, pp. 108–116.

[117] D. C. Bossen, J. M. Tendler, and K. Reick, "Power4 system design for high reliability," *IEEE Micro*, vol. 22, no. 2, pp. 16–24, Mar./Apr. 2002.

[118] S. Ghosh, P. Batra, K. Kim, and K. Roy, "Process-tolerant low-power adaptive pipeline under scaled-Vdd," in *Proc. Custom Integr. Circuits Conf.*, 2007, pp. 733–736.

[119] S. Ghosh, J. H. Choi, P. Ndai, and K. Roy, "O2C: Occasional two-cycle operations for dynamic thermal management in high performance in-order microprocessors," in *Proc. Int. Symp. Low Power Electron. Design*, 2008, pp. 189–192.

[120] K. Kang, K. Kim, and K. Roy, "Variation resilient low-power circuit design methodology using on-chip phase locked loop," in *Proc. Design Autom. Conf.*, 2007, pp. 934–939.

[121] N. Banerjee, G. Karakonstantis, and K. Roy, "Process variation tolerant low power DCT architecture," in *Proc. Design Autom. Test Eur.*, 2007, pp. 1–6.

[122] G. Karakonstantis, N. Banerjee, K. Roy, and C. Chakrabarty, "Design methodology to trade-off power, output quality and error resiliency: Application to color interpolation

filtering," in *Proc. Int. Conf. Comput.-Aided Design*, 2007, pp. 199–204.

[123] N. Banerjee, J. H. Choi, and K. Roy, "A process variation aware low power synthesis methodology for fixed-point FIR filters," in *Proc. Int. Symp. Low Power Electron. Design*, 2007, pp. 147–152.

[124] T. Kim, R. Persaud, and C. H. Kim, "Silicon odometer: An on-chip reliability monitor for measuring frequency degradation of digital circuits," in *Proc. Very Large Scale Integr. (VLSI) Circuits Symp.*, 2007, pp. 122–123.

[125] M. Agarwal, B. C. Paul, M. Zhang, and S. Mitra, "Circuit failure prediction and its application to transistor aging," in *Proc. Very Large Scale Integr. (VLSI) Test Symp.*, 2007, pp. 277–286.

[126] K. Flautner, N. S. Kim, S. Martin, D. Blaauw, and T. Mudge, "Drowsy caches: Simple techniques for reducing leakage power," in *Proc. Int. Symp. Comput. Architecture*, 2002, pp. 148–157.

[127] P. Ramachandran, S. V. Adve, P. Bose, J. A. Rivers, and J. Srinivasan, "Metrics for architecture-level lifetime reliability analysis," in *Proc. Int. Symp. Performance Anal. Syst. Softw.*, 2008, pp. 202–212.

[128] X. Li, S. V. Adve, P. Bose, and J. A. Rivers, "Architecture-level soft error analysis: Examining the limits of common assumptions," in *Proc. Int. Conf. Dependable Syst. Netw.*, 2007, pp. 266–275.

[129] J. Srinivasan, "Lifetime reliability aware microprocessors," Ph.D. dissertation, Comput. Sci. Dept., Univ. Illinois at Urbana-Champaign, Urbana, IL, May 2006.

[130] J. Srinivasan, S. V. Adve, P. Bose, and J. A. Rivers, "Lifetime reliability: Toward an architectural solution," *IEEE Micro*, vol. 25, *Special Issue on Emerging Trends*, no. 3, pp. 2–12, May/Jun. 2005.

[131] J. Srinivasan, S. V. Adve, P. Bose, and J. A. Rivers, "Exploiting structural duplication for lifetime reliability enhancement," in *Proc. Int. Symp. Comput. Architecture*, 2005, pp. 520–531.

[132] J. R. Heath, P. Kuekes, G. Snider, and S. Williams, "A defect-tolerant computer architecture: Opportunities for nanotechnology," *Science*, pp. 1716–1721, 1998.

[133] T. M. Austin, "DIVA: A reliable substrate for deep submicron microarchitecture design," in *Proc. Int. Symp. Microarchitecture (MICRO)*, 1999, pp. 196–207.

[134] T. Austin, V. Bertacco, S. Mahlke, and K. Cao, "Reliable systems on unreliable fabrics," *IEEE Design Test Comput.*, vol. 25, no. 4, pp. 322–332, Jul./Aug. 2008.

[135] M. M. Kim, J. D. Davis, M. Oskin, and T. Austin, "Polymorphic on-chip networks," in *Proc. Int. Symp. Comput. Architecture*, 2008, pp. 101–112.

[136] K. Constantinides, O. Mutlu, T. Austin, and V. Bertacco, "Software-based on-line detection of hardware defects: Mechanisms, architectural support, and evaluation," in *Proc. Int. Symp. Microarchitecture*, 2007, pp. 97–108.

[137] K. Constantinides, S. Plaza, J. Blome, B. Zhang, V. Bertacco, S. Mahlke, T. Austin, and M. Orshansky, "Architecting a reliable CMP switch," *ACM Trans. Architecture Code Optim.*, vol. 4, no. 1, pp. 1–37, 2007.

[138] F. A. Bower, P. G. Shealy, S. Ozev, and D. J. Sorin, "Tolerating hard faults in microprocessor array structures," in *Proc. Int. Symp. Microarchitecture*, 2004, pp. 51–60.

[139] F. A. Bower, D. J. Sorin, and S. Ozev, "A mechanism for online diagnosis of hard faults in microprocessors," in *Proc. Int. Symp. Microarchitecture*, 2005, pp. 197–208.

[140] M. K. Qureshi, O. Mutlu, and Y. N. Patt, "Microarchitecture based introspection: A technique for transient-fault tolerance in microprocessors," in *Proc. Int. Conf. Dependable Syst. Netw.*, 2005, pp. 434–443.

[141] M. Mehrara, M. Attarian, S. Shyam, K. Constantinides, V. Bertacco, and T. Austin, "Low-cost protection for SER upsets and silicon defects," in *Proc. Design Autom. Test Eur.*, 2007, pp. 1146–1151.

[142] K. Constantinides, S. Shyam, S. Phadke, V. Bertacco, and T. Austin, "Ultra low-cost defect protection for microprocessor pipelines," in *Proc. Int. Conf. Architectural Support Programm. Lang. Operat. Syst.*, 2006, pp. 73–82.

[143] K. Constantinides, J. Blome, S. Plaza, B. Zhang, V. Bertacco, S. Mahlke, T. Austin, and M. Orshansky, "BulletProof: A defect tolerant CMP switch architecture," in *Proc. Int. Symp. High-Performance Comput. Architecture*, 2006, pp. 3–14.

[144] J. M. Rabaey, *Digital Integrated Circuits: A Design Perspective*. Upper Saddle River, NJ: Prentice-Hall, 1996.

[145] *International Technology Roadmap for Semiconductors*. [Online]. Available: http://www.itrs.net/

[146] S. Xiong and J. Bokor, "Sensitivity of double-gate and FinFET devices to process variations," *IEEE Trans. Electron Devices*, vol. 50, no. 11, pp. 2255–2261, Nov. 2003.

[147] C. Kshirsagar, A. Madan, and N. Bhat, "Device performance variation in 20 nm tri-gate FinFETs," in *Proc. Int. Workshop Phys. Semiconductor Devices*, 2005, pp. 706–714.

[148] B. Paul, S. Fujita, M. Okajima, T. H. Lee, H.-S. P. Wong, and Y. Nishi, "Impact of a process variation on nanowire and nanotube device performance," *IEEE Trans. Electron Devices*, vol. 54, no. 9, pp. 2369–2376, Sep. 2007.

[149] A. Nieuwoudt and Y. Massoud, "On the impact of process variations for carbon nanotube bundles for VLSI interconnect," *IEEE Trans. Electron Devices*, vol. 54, no. 3, pp. 446–455, Mar. 2007.

[150] S. Ghosh, D. Mahapatra, G. Karakonstantis, and K. Roy, "Low-voltage high-speed robust hybrid arithmetic units using adaptive clocking *IEEE Trans. Very Large Scale Integr. (VLSI) Syst.*

[151] D. Mohapatra, G. Karakonstantis, and K. Roy, "Low-power process-variation tolerant arithmetic units using input-based elastic clockin," in *Proc. Int. Symp. Low Power Electron. Design*, 2007, pp. 74–79.

[152] M. Orshansky and K. Keutzer, "A general probabilistic framework for worst case timing analysis," in *Proc. Design Autom. Conf.*, 2002, pp. 556–561.

[153] C. Visweswariah, K. Ravindran, K. Kalafala, S. G. Walker, S. Narayan, D. K. Beece, J. Piaget, N. Venkateswaran, and J. G. Hemmett, "First-order incremental block-based statistical timing analysis," *IEEE Trans. Comput.-Aided Design Integr. Circuits Syst.*, vol. 25, no. 10, pp. 2170–2180, Oct. 2006.

[154] J. Blome, S. Feng, S. Gupta, and S. Mahlke, "Self-calibrating online wearout detection," in *Proc. Int. Symp. Microarchitecture*, 2007, pp. 109–120.

[155] S. Feng, S. Gupta, and S. Mahlke, "Olay: Combat the signs of aging with introspective reliability management," in *Proc. Workshop Quality-Aware Design/Int. Symp. Comput. Architecture*, 2008.

[156] E. Seevinck, F. J. List, and J. Lohstroh, "Static-noise margin analysis of MOS SRAM cells," *IEEE J. Solid-State Circuits*, vol. JSSC-22, no. 5, pp. 748–754, Oct. 1987.

[157] E. Grossar, M. Stucchi, K. Maex, and W. Dehaene, "Read stability and write-ability analysis of SRAM cells of nanometer technologies," *IEEE J. Solid-State Circuits*, vol. 41, no. 11, pp. 2577–2588, Nov. 2006.

[158] R. V. Joshi, S. Mukhopadhyay, D. W. Plass, Y. H. Chan, C. Chuang, and A. Devgan, "Variability analysis for sub-100 nm PD/SOI CMOS SRAM cell," in *Proc. Eur. Solid-State Circuits Conf.*, 2004, pp. 211–214.

[159] K. Agarwal and S. Nassif, "Statistical analysis of SRAM cell stability," in *Proc. Design Autom. Conf.*, 2006, pp. 57–62.

[160] B. Zhang, A. Arapostathis, S. Nassif, and M. Orshansky, "Analytical modeling of SRAM dynamic stability," in *Proc. Int. Conf. Comput.-Aided Design*, 2006, pp. 315–322.

[161] Z. Guo, A. Carlson, L.-T. Pang, K. Duong, T.-J. K. Liu, and B. Nikolić, "Large-scale read/write margin measurement in 45 nm CMOS SRAM arrays," in *Proc. Symp. Very Large Scale Integr. (VLSI) Circuits*, 2008, pp. 42–43.

[162] G. M. Huang, W. Dong, Y. Ho, and P. Li, "Tracing SRAM separatrix for dynamic noise margin analysis under device mismatch," in *Proc. Int. Behav. Model. Simul. Conf.*, 2007, pp. 6–10.

[163] R. Kanj, R. Joshi, and S. Nassif, "Mixture importance sampling and its application to the analysis of SRAM designs in the presence of rare failure events," in *Proc. Design Autom. Conf.*, 2006, pp. 69–72.

[164] A. Singhee and R. A. Rutenbar, "Statistical blockade: A novel method for very fast Monte Carlo simulation for rare circuit events, and its application," in *Proc. Design Autom. Test Eur. Conf.*, 2007, pp. 1379–1384.

[165] S. Srivastava and J. Roychowdhury, "Rapid estimation of the probability of SRAM failure due to MOS threshold variations," in *Proc. Custom Integr. Circuits Conf.*, 2007, pp. 229–232.

[166] P. Yang, D. E. Hocevar, P. F. Cox, C. Machala, and P. K. Chatterjee, "An integrated and efficient approach for MOS VLSI statistical circuit design," *IEEE Trans. Comput.-Aided Design Integr. Circuits Syst.*, vol. 5, no. 1, pp. 5–14, Jan. 1986.

[167] M. Abramovici, M. Breuer, and A. Friedman, *Digital Systems Testing and Testable Design*. New York: Wiley-IEEE Press, 1994.

[168] L. Lavagno, P. C. McGeer, A. Saldanha, and A. L. Sangiovanni-Vincentelli, "Timed shared circuits: A power-efficient design style and synthesis tool," in *Proc Design Autom. Conf.*, 1995, pp. 254–260.

[169] F. Brglez, D. Bruan, and K. Kozminski, "Combinational profiles of sequential benchmarks circuits," in *Proc. Int. Symp. Circuits Syst.*, 1989, pp. 1929–1934.

[170] C. H. Kim, K. Roy, S. Hsu, A. Alvandpour, R. Krishnamurthy, and S. Borkhar, "A process variation compensating technique for sub-90 nm dynamic circuits," in *Proc. Symp. Very Large Scale Integr. (VLSI) Circuits*, 2003, p. 205.

ABOUT THE AUTHORS

Swaroop Ghosh received the B.E. (honors) degree in electrical engineering from Indian Institute of Technology, Roorkee, India, in 2000, the M.S. degree in electrical and computer engineering from University of Cincinnati, Cincinnati, OH, in 2004, and the Ph.D. degree in electrical and computer engineering from the School of Electrical and Computer Engineering, Purdue University, West Lafayette, IN, in 2008.

Currently, he is a Senior Design Engineer in Memory Circuit Technology Group, Intel, Hillsboro, OR. From 2000 to 2002, he was with Mindtree Technologies Pvt., Ltd., Bangalore, India, as a VLSI Design Engineer. He spent summer 2006 in Intel's Test Technology group and summer 2007 in AMD's design-for-test group. His research interests include low-power, adaptive circuit and system design, fault-tolerant design, and digital testing for nanometer technologies.

Kaushik Roy (Fellow, IEEE) received the B.Tech. degree in electronics and electrical communications engineering from the Indian Institute of Technology, Kharagpur, India, in 1983 and the Ph.D. degree from the Electrical and Computer Engineering Department, University of Illinois at Urbana-Champaign, Urbana, in 1990.

He was with the Semiconductor Process and Design Center, Texas Instruments, Dallas, TX, where he worked on FPGA architecture development and low-power circuit design. He joined the Electrical and Computer Engineering Faculty, Purdue University, West Lafayette, IN, in 1993, where he is currently a Professor and holds the Roscoe H. George Chair of Electrical and Computer Engineering. He has published more than 500 papers in refereed journals and conferences, holds 15 patents, graduated 50 Ph.D. students, and is coauthor of two books on low power CMOS VLSI design. His research interests include spintronics, VLSI design/CAD for nanoscale silicon and nonsilicon technologies, low-power electronics for portable computing and wireless communications, VLSI testing and verification, and reconfigurable computing.

Dr. Roy received the National Science Foundation Career Development Award in 1995, IBM faculty partnership award, ATT/Lucent Foundation award, 2005 SRC Technical Excellence Award, SRC Inventors Award, Purdue College of Engineering Research Excellence Award, Humboldt Research Award in 2010, and best paper awards at 1997 International Test Conference, IEEE 2000 International Symposium on Quality of Integrated Circuit Design, 2003 IEEE Latin American Test Workshop, 2003 IEEE Nano, 2004 IEEE International Conference on Computer Design, 2006 IEEE/ACM International Symposium on Low Power Electronics and Design, and 2005 IEEE Circuits and System Society Outstanding Young Author Award (Chris Kim), 2006 IEEE Transactions on Very Large Scale Integration (VLSI) Systems best paper award. He is Purdue University Faculty Scholar. He was a Research Visionary Board Member of Motorola Labs (2002). He has been on the editorial board of the IEEE Design and Test of Computers, the IEEE Transactions on Circuits and Systems, and the IEEE Transactions on Very Large Scale Integration (VLSI) Systems. He was Guest Editor for Special Issue on Low-Power VLSI in the IEEE Design and Test of Computers (1994) and the IEEE Transactions on Very Large Scale Integration (VLSI) Systems (June 2000), IEE Proceedings—Computers and Digital Techniques (July 2002).

View publication stats